Golf Master Parts Book

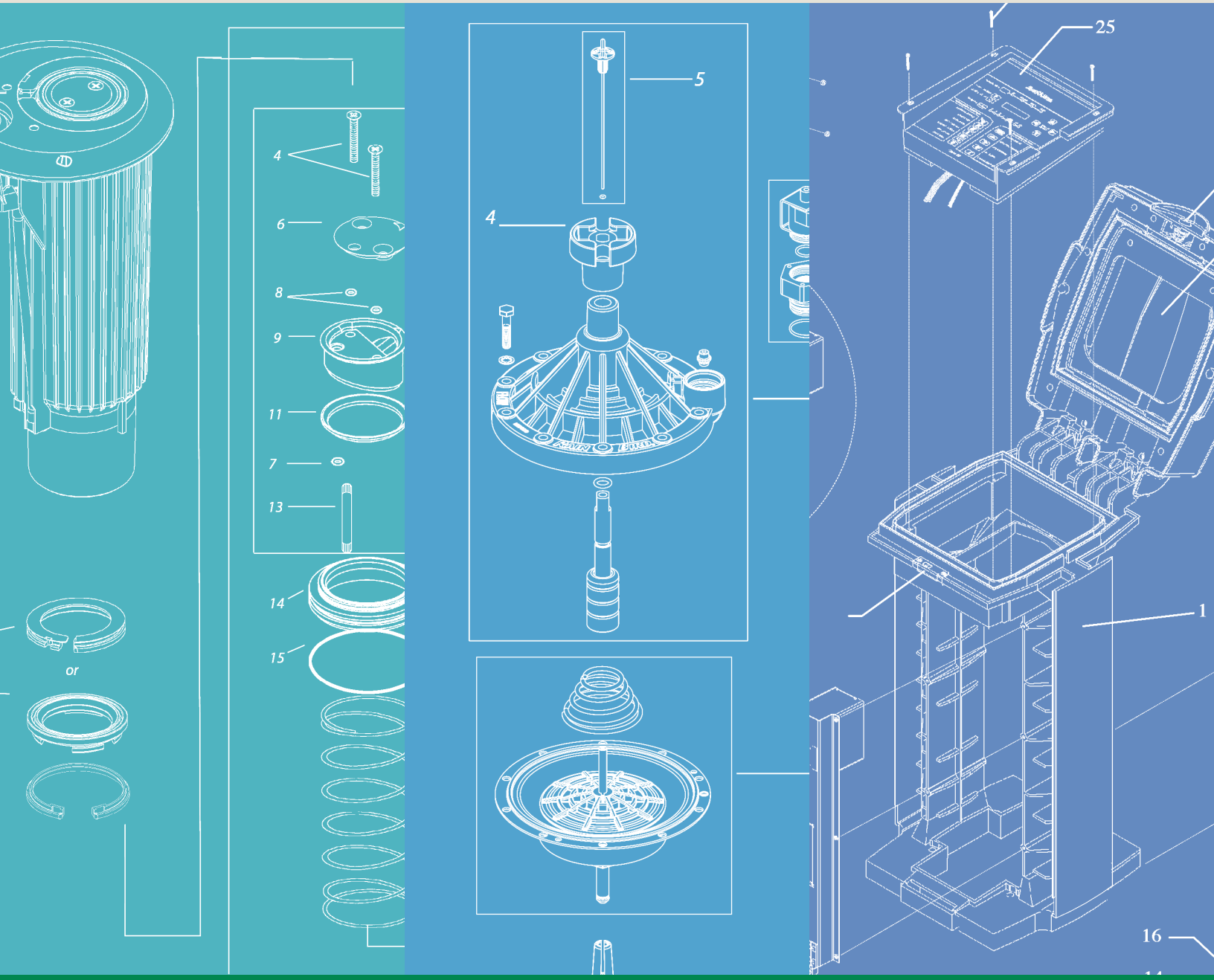

Effective Date: February 2023

Catalog Number	Description
PRELIMINARY	
000	Index
001	Introduction & Instructions
ROTORS	
002	Eagle's Nest™ Rotor Adaptors For 47/51DR Series Rotors
003	Eagle™ 351
004	Eagle™ 500 Internal Assembly
005	Eagle™ 550 Internal Assembly
006	Eagle™ 700 Internal Assembly
007	Eagle™ 750 Internal Assembly
008	Eagle™ 900 Internal Assembly
009	Eagle™ 950 Internal Assembly
010	Eagle™ 500 / 550 / 700 / 750 Series
011	Eagle™ 900 / 950 / 1100 / 1150 / 115-E Series
012	Eagle™ 1100 Series Internal Assembly
013	Eagle™ 1150 Series Internal Assembly
014	Rain Bird 700 Internal Assembly
015	Rain Bird 551 / 751 Internal Assembly
016	Rain Bird 552 / 752 Internal Assembly
017	Rain Bird 952 Internal Assembly
018	Rain Bird 702 Internal Assembly
MANUAL VALVES	
019	SH-0 / SH-0-BSP / SH-1 / SH-2 / SH-2-BSP / SH-3
020	One-Piece Quick Coupler Valves 3, 5, And 7 Series
021	Two-Piece Quick Coupler Valves 33 And 44 Series
ELECTRIC & IC VALVES	
022	GSV (Golf Solenoid Valve) – Electric and IC
023	300 BPE and BPES Series
024	PRS, PRS-2, PRS-B, PRS-D
CONTROLLERS AND INTERFACES	
025	Controller Assembly With Pedestal (PAR+ES)
026	Integrated Control Interface (ICI)
027	Maxi Remote Location Kit
028	The Freedom System™
SWING JOINTS	
029	Standard Swing Joint Assembly
030	Standard Swing Joint Assembly With Acme Inlet
031	Triple Top Swing Joint Assembly
032	Triple Top Swing Joint Assembly With Acme Inlet
ACCESSORIES AND TOOLS	
033	Adapters
034	Accessories - Tools

Note: Part numbers enclosed in brackets ( ) are not available individually, but may be sold in assemblies or kits.

TO BUY GENUINE RAIN BIRD PARTS, CONTACT YOUR LOCAL DISTRIBUTOR OR VISIT OUR ONLINE STORE AT WWW.RAINBIRD.COM

Rain Bird is committed to providing you with the best parts and after sales service programs in the irrigation industry. This Master Parts Book represents that commitment by supplying you with current information so that you can obtain replacement parts for your Rain Bird products. We hope you will find this book useful as you purchase and use Genuine Rain Bird Parts.

HOW TO USE THE MASTER PARTS BOOK (SEE NEXT PAGE FOR EXAMPLE)

The Master Parts Book was designed to be easy. There is a simple index which allows you to quickly locate the part list you need. Each part list has a simple format. Just follow these guidelines and you should easily find the part you want.

1. *First look at the picture to identify the part in which you are interested. Note the reference number of that part.*

2. *Look at the headings on the part list matrix and find the product model which you need parts for. Look down the column until you reach the row with the reference number of the part you previously identified. At that intersection is the part number you need.*

3. *If the part number you need IS NOT IN BRACKETS ( ) then the part can be purchased by itself. However, if the part IS IN BRACKETS ( ) then that part is either not sold or it must be purchased in a kit or an assembly.*

4. *A part sold in an assembly will have its description indented under the assembly that is available. A part sold in a kit will have a footnote (usually a letter) beside its description. Look to the bottom of that page or the last page in the list for the kit number.*

HOW TO ORDER PARTS (Rain Bird Distributors Only)

Rain Bird distributors can order parts in a number of ways. Orders for parts should be placed by using :

1. *Self Service at www.rainbird.com/distributor For new Self Service accounts, contact Customer Service.*
2. *Faxing to Customer Service*
3. *Electronic Data Interchange (EDI)*

Website	*Customer Service Telephone*	*Customer Service Fax*
rainbird.com/golf	*800-282-1933*	*800-843-4162*

HOW PARTS ARE SHIPPED (Rain Bird Distributors Only)

Rain Bird parts are shipped in one of two ways:

1. *Regular parts orders are shipped like your normal Rain Bird orders with the same processing times and freight policies. They can, however, include both parts and whole goods.*

2. *Quick Parts Service (QPS) orders are special parts only orders that ship quickly to your door. We process them in one day and ship them out in one to two business days depending on your location. Domestic customers receive prepaid freight on orders over $ 250.00 net. There is NO MINIMUM purchase on QPS parts orders. Most QPS orders are received at your door within 2 to 5 days. We encourage you to use QPS whenever you need quick delivery.*

QPS - The Quick Way to Receive Rain Bird Parts!

Note: Part numbers enclosed in brackets ( ) are not available individually, but may be sold in assemblies or kits.

(THIS PAGE IS AN EXAMPLE ONLY, DO NOT USE FOR REFERENCING PARTS.)

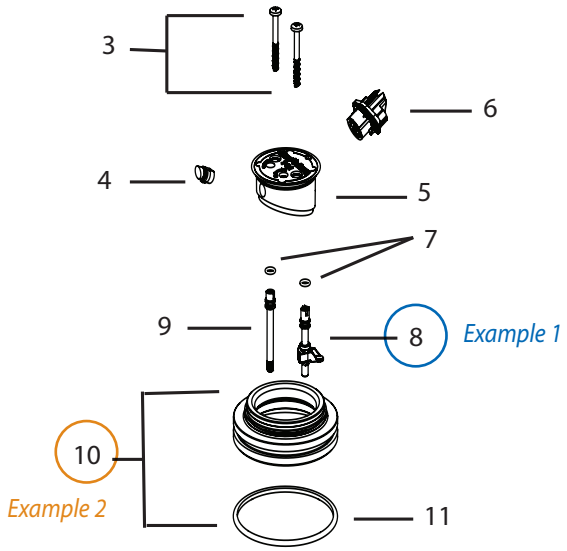

Example 1 – *You need a 551-E FC-PC Arm-Lever Assembly. First, find the reference number for the assembly in the picture (# 8). Second, look at the headings on the parts list matrix and find the model number 551-E. Third, go down the 551-E column to reference number #8. The part number you need is 214752 (shared across all internal models).*

Ref.	Part Description	Qty.	551-E/751-E	551-S/H/751-S/H	551B/751B
SNAP RINGS					
1	Snap Cover	1	21192101	21192101	21192101
INTERNAL ASSEMBLY					
2	Rain Bird Internal Assembly (A) (B)	1	(214751xx)	(214751xx)	214651xx
NOZZLE HOUSING AND NOZZLES					
3	Nozzle Housing Screw	2	214754	214754	214754
4	Nozzle plug	1	211593	211593	211593
5	Nozzle Housing Less Nozzle	1	213760	213760	213760
6	Standard Range Nozzle and O-Ring Assembly (C)	1	213750xx	213750xx	213750xx
6	Short Throw Range Nozzle and O-Ring Assembly (D)	1	213751xx	213751xx	213751xx
7	O-Ring (Cover, Adjust, & Lever)	2	211236	211236	211236
8	FC/PC Arm-Lever Assembly	1	214752	214752	214752
9	Arc Adjust Stem	1	210420	210420	210420
BEARING GUIDE / MOTOR ASSEMBLY					
10	Bearing Guide Assembly, Standard	1	211147	—	—
10	Bearing Guide Assembly, Low Flow	1	—	(211263)	(211263)
11	Bearing Guide O-ring	1	211242	211242	211242
12	FC-PC Trip Rod	1	214753	214753	214753
13	Rain Bird 751 Riser Motor Assembly	1	(21475100)	(21475100)	(21475100)
14	Stator/Screen Kit	1	21040301	21040301	21040301
15	SAM Screen Kit Block Models	1	211292	211292	211292
19	Pop-up Seal (White)	1	(201399)	(201399)	(201399)

Example 2 – *You need the Bearing Guide Assembly for Low Flow on a 751-Block Rotor. As before, find the reference number for the Bearing Guide on the picture (# 10). Next, find the 751B column and go down the list to reference item #10. The part you need is (211263). Since part 211263 is in brackets it is not available by itself, but may be in a kit or assembly. Look at the part's description to see if it is indented below an assembly. In this case the part is not available, please contact Rain Bird Golf for assistance with this item.*

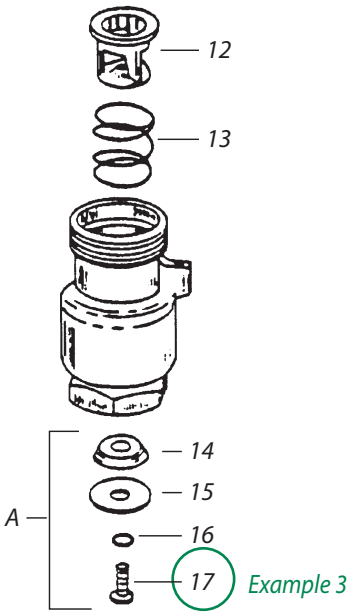

Example 3 – *You need new screw for a Two-Piece Quick Coupler Valve 44 Series. Find the reference number for the screw (#17) and look at the matrix to find the part or reference number. Since these references are in brackets look at their descriptions below or reference the image to see if there are any footnotes (usually a letter). If there are footnotes look to the bottom of the matrix to find the kit or notation. In this case the kit (A) is in the matrix and contains the screw.*

Ref	Part Description	33RC 33LRC 33NP	33DRC 33DLRC 33DNP	44RC 44LRC 44NP
VALVE ASSEMBLY				
9	Upper body	(200204)	(200204)	(200208)
10	Screw	(200187)	(200187)	(200187)
11	Flange	(200188)	(200188)	200209
12	Cage	(200503)	(200503)	(200210)
13	Spring	(200502)	(200502)	200211
14	Rubber disc (Buna-N)	—	—	(200213)
15	Retainer	—	—	(200214)
16	Washer	—	—	(200215)
17	Screw	—	—	(205806)
A	Repair kit (33 series includes 12 and 13)	(204146)	(204146)	203747

(THIS PAGE IS AN EXAMPLE ONLY, DO NOT USE FOR REFERENCING PARTS.)

Note: Part numbers enclosed in brackets ( ) are not available individually, but may be sold in assemblies or kits.

TO BUY GENUINE RAIN BIRD PARTS, CONTACT YOUR LOCAL DISTRIBUTOR OR VISIT OUR ONLINE STORE AT WWW.RAINBIRD.COM

Catalog Number 002

EAGLE'S NEST™ ROTOR ADAPTORS FOR 47/51DR SERIES ROTORS

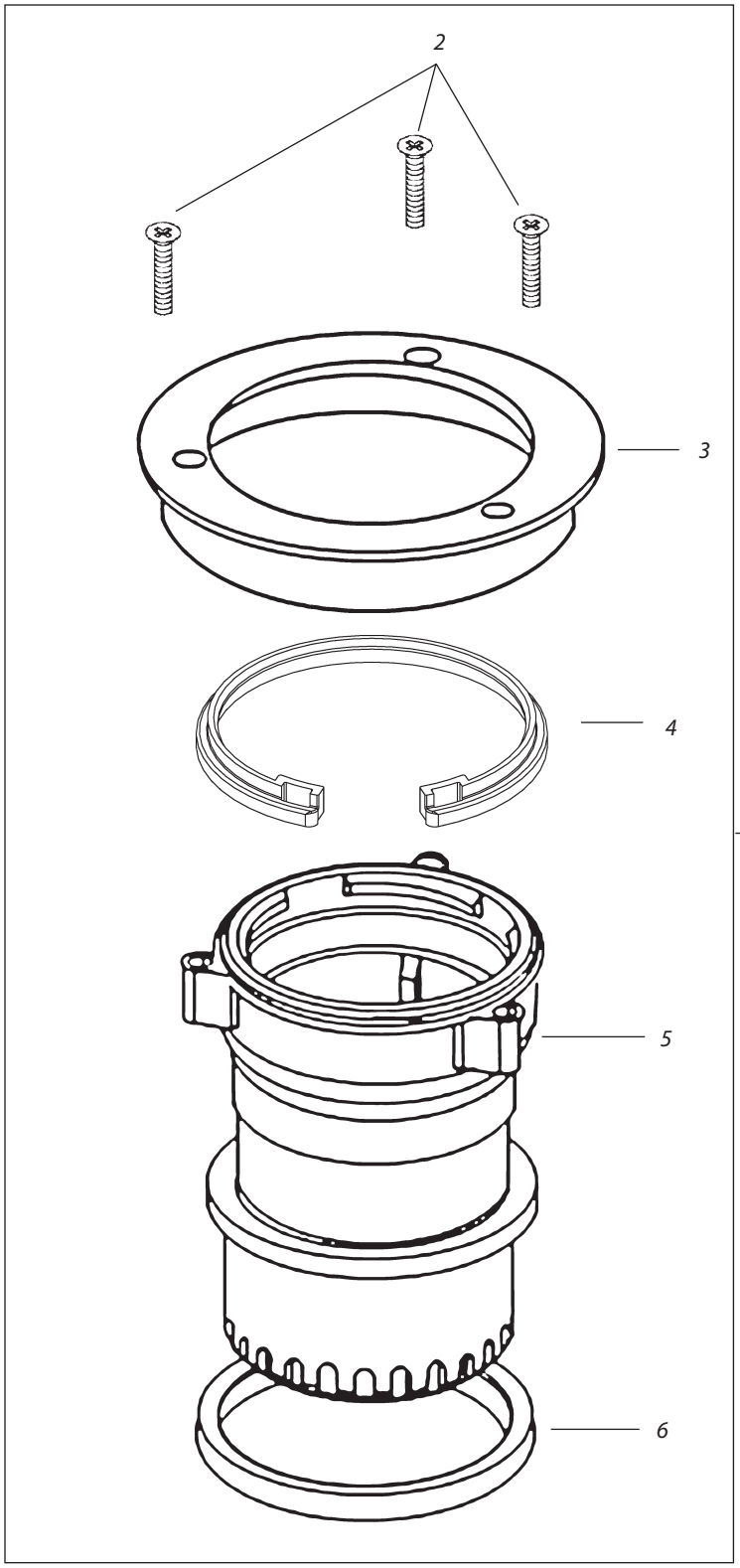

Ref.	Part Description	Qty.	Part No.
1	EAGLE'S NEST Rotor Adaptors	1	211579
2	Screw, 3/4" Self Tapping #10 Thd.	3	(211487)
3	Cover, Eagle's Nest	1	(211482)
4	Snap Ring, Eagle's Nest 47/51	1	21113301
5	Adaptor, Eagle's Nest	1	—
6	Seal, U-cup (Red)	1	(211239)

Note: Part numbers enclosed in brackets ( ) are not available individually, but may be sold in assemblies or kits.

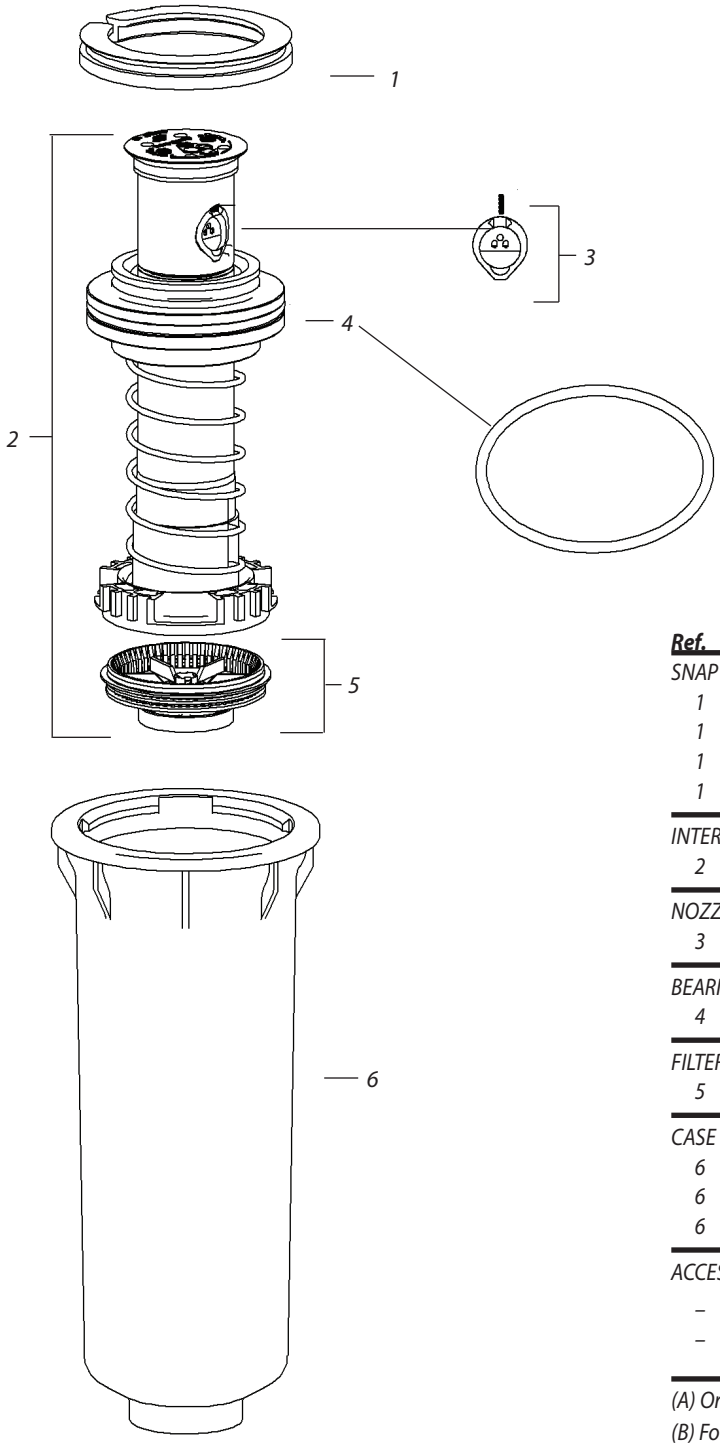

Ref.	Part Description	Qty.	All Models
SNAP RINGS			
1	Snap Cover, Black	1	21192101
1	Snap Cover, Yellow	1	21192102
1	Snap Cover, White	1	21192103
1	Snap Cover, Purple	1	21192104
INTERNAL ASSEMBLY			
2	Internal Assembly (Does not include nozzle)(A)(B)	1	21291101
NOZZLES			
3	Nozzle Kit (C)	1	212913xx
BEARING ASSEMBLY			
4	Bearing Guide O-Ring	1	211242
FILTER ASSEMBLY			
5	Screen and Check Valve Assy Kit	1	212914
CASE			
6	Case (NPT)	1	(21148901)
6	Case (BSP)	1	(21148902)
6	Case (ACME)	1	21148903
ACCESSORIES/TOOLS			
–	Support Tool	1	232693S
–	Flat-Head Rotor Tool	1	Y05100

(A) Order nozzle kit if necessary - Part#212913xx
(B) For Non-potable applications use Standard Part and Purple Snap Ring - Part #21192104.
(C) Specify Nozzle Kit when Ordering - XX = 02 (Includes 18M, 26M, 30M and 36M Nozzles); 22 (Includes 18S, 22S and 26S Nozzles); 36 (Includes 30S, 36S, and 40 Nozzles); 48 (Includes 44, 48, and 54 Nozzles).

Note: Part numbers enclosed in brackets ( ) are not available individually, but may be sold in assemblies or kits.

TO BUY GENUINE RAIN BIRD PARTS, CONTACT YOUR LOCAL DISTRIBUTOR OR VISIT OUR ONLINE STORE AT WWW.RAINBIRD.COM

EAGLE™ 500 INTERNAL ASSEMBLY

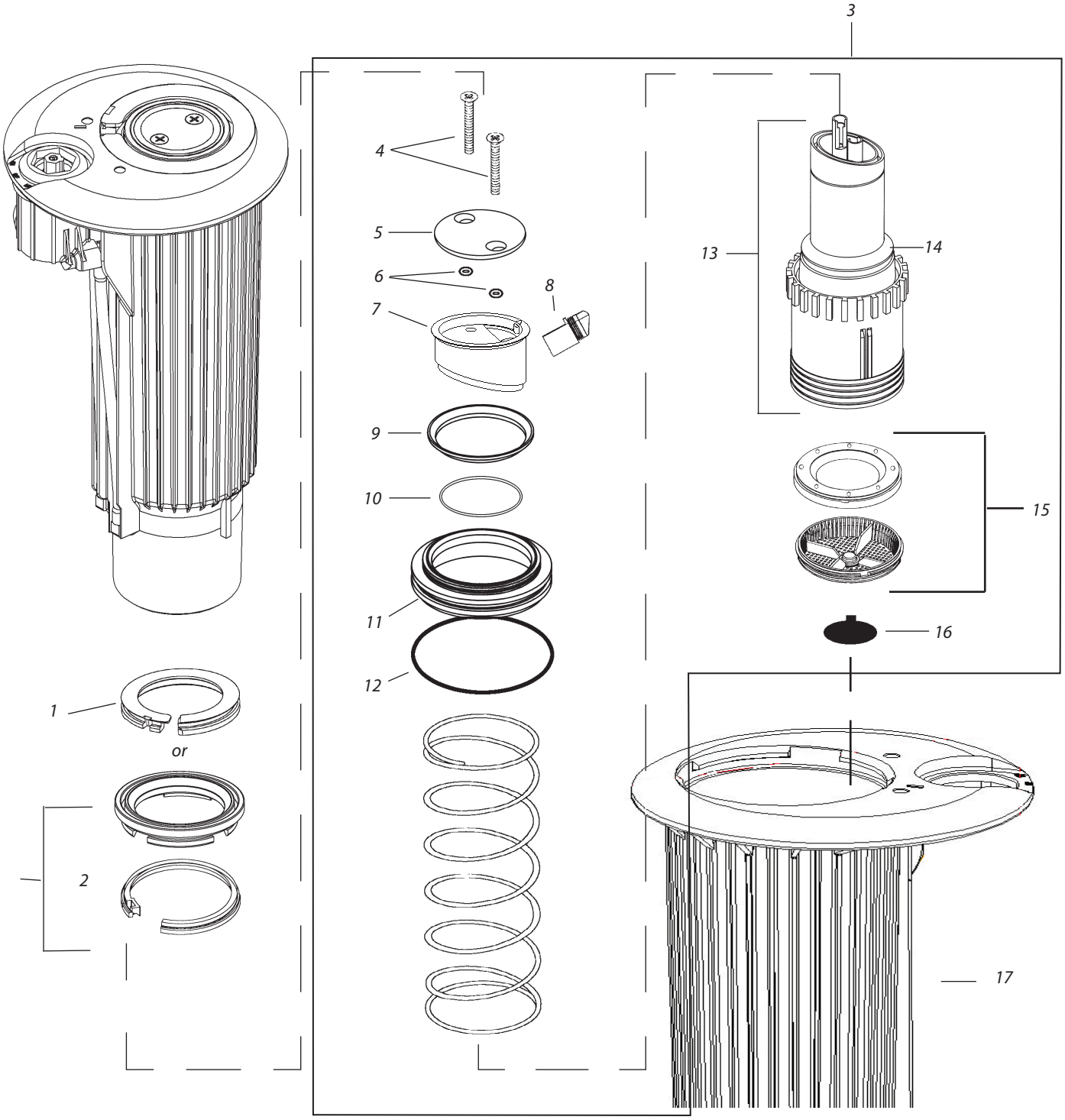

Note: Part numbers enclosed in brackets ( ) are not available individually, but may be sold in assemblies or kits.

EAGLE™ 500 INTERNAL ASSEMBLY

Ref.	Part Description	Qty.	500-E/IC	500-S/H	500B
SNAP RINGS					
1	Snap Cover	1	see chart	see chart	see chart
2	Rubber Cover Kit	1	(212551)	(212551)	(211355)
INTERNAL ASSEMBLY					
3	Internal Assembly (A)	1	(214751xx)	211580xx	(B)211580xx
COVER ASSEMBLY					
4	Self-Tapping Screw	2	210974	210974	210974
5	Housing Cover	1	(211282)	(211282)	(211282)
6	Screw O-Ring	2	211236	211236	211236
NOZZLES					
7	Nozzle Housing - Black (C)	1	21035602	21035602	21035602
8	Range Nozzle Assembly (A)	1	213500xx	213500xx	213500xx
9	Retract Seal	1	210354	210354	210354
15	Stator / Screen Kit	1	21040301	21040301	21040301
16	Seal-a-Matic™ Sreen Assy	1	—	—	211292
BEARING / RISER-MOTOR ASSEMBLY					
10	Nozzle Housing O-Ring	1	210366	210366	210366
11	Bearing Guide Assy, STD	1	211147	—	—
11	Bearing Guide Assy, LO-FLOW (D)	1	—	211263	211263
12	Bearing Guide O-Ring	1	211147	211147	211147
13	Riser Motor Assembly	1	(21470000)	(21470000)	(21470000)
14	Pop-up Seal (White)	1	210399	210399	210399
17	CASE ASSEMBLY See Catalog No. 010				

(A) Specify Nozzle Size when ordering. Available in # 51, 52, 53, 54.
(B) Also reqires Seal-a-Matic™ Sreen Assy Part # 211292
(C) For non-potable applications use standard part and purple snap ring, part # 21192104
(D) The LO-FLOW Bearing Guide #211263 may also be used on the 500 Series Electric rotor
(E) For smooth case rotors use part # 211602

Ref.	KITS & Accessories	Qty.	P/N
1	Snap-Cover, Black		21192101
1	Snap-Cover, Yellow		21192102
1	Snap-Cover, White		21192103
1	Snap-Cover, Purple (Non-Potable)		21192104
5	Cover, Yardage Marker Blank (Black)		(21175201)
-	Sod Cup Kit		#212613

Stator / Poppet Configurations

Color	Number	Electric Pressure Setting psi (bars) 60 (4,1)	70 (4,8)	80 (5,5)	100 (6,9)	Hyd, SAM, B
Black	#51	S4	S4	S4	S4	S4
Beige	#52	S4	S4	S4	S4	S4
Gray	#53	S4	S4	S4	S4	S4
Red	#54	S8	S8	S8	S8	S8

S4 = Stator with 4 Holes S8 = Stator with 8 Holes

Stator with 4 Holes Stator with 8 Holes

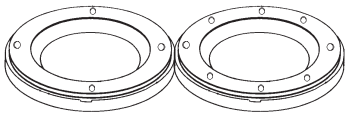

Note: Part numbers enclosed in brackets ( ) are not available individually, but may be sold in assemblies or kits.

TO BUY GENUINE RAIN BIRD PARTS, CONTACT YOUR LOCAL DISTRIBUTOR OR VISIT OUR ONLINE STORE AT WWW.RAINBIRD.COM

EAGLE™ 550 INTERNAL ASSEMBLY

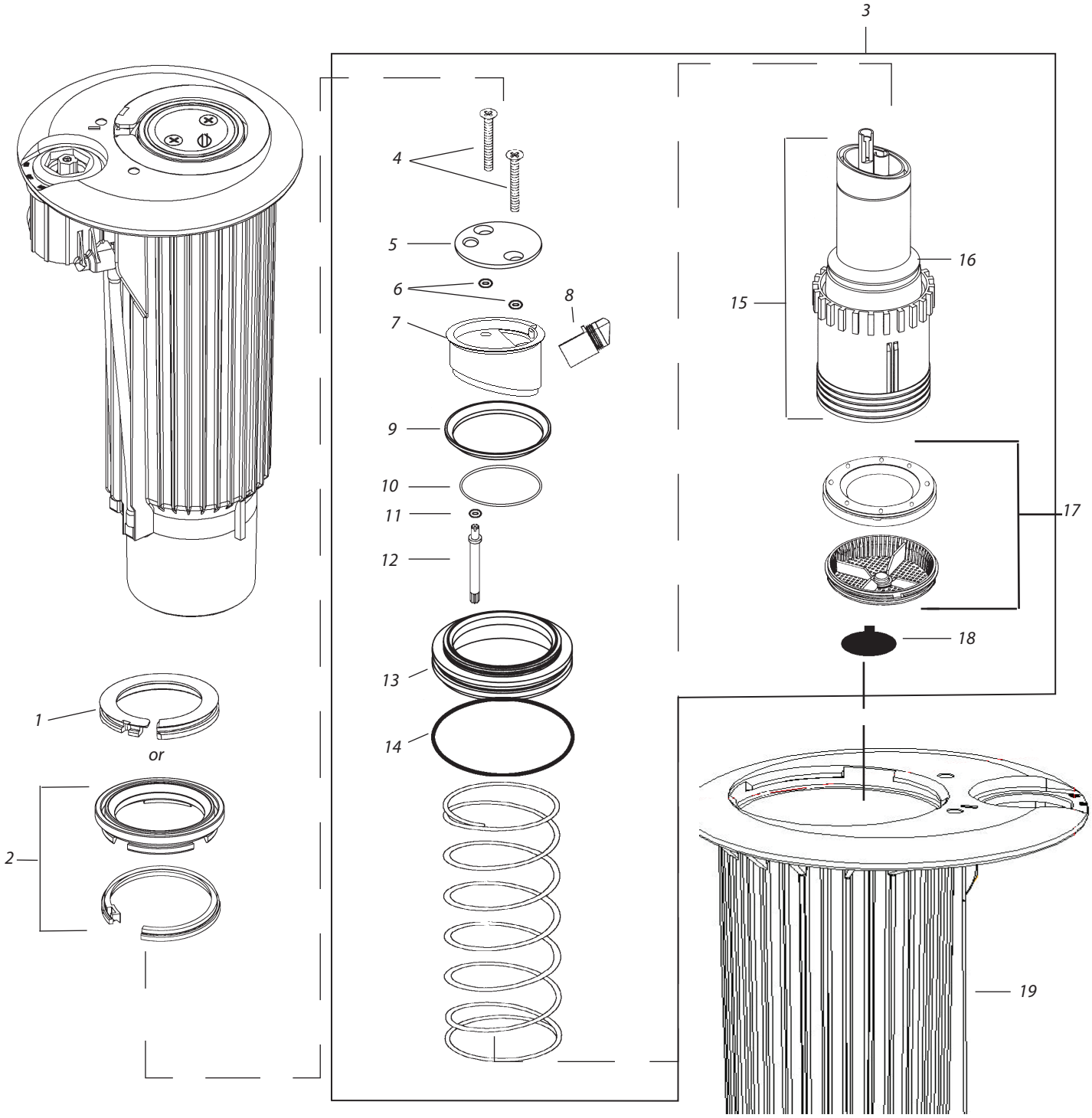

Note: Part numbers enclosed in brackets ( ) are not available individually, but may be sold in assemblies or kits.

EAGLE™ 550 INTERNAL ASSEMBLY

Ref.	Part Description	Qty.	550-E/IC	550-S/H	550B
SNAP RINGS					
1	Snap Cover	1	21192101	21192101	21192101
2	Rubber Cover Kit	1	(212551)	(212551)	(211355)
INTERNAL ASSEMBLY					
3	Internal Assembly (A)	1	(214551xx)	(B) (214551xx)	(B) (214751xx)
COVER ASSEMBLY					
4	Self-Tapping Screw	2	210974	210974	210974
5	Housing Cover	1	(211281)	(211281)	(211281)
6	Screw O-ring	2	211236	211236	211236
NOZZLES					
7	Nozzle Housing- Black (C)	1	21035601	21035601	21035601
8	Range Nozzle Assembly (A)	1	213500xx	213500xx	21500-xx
9	Retract Seal (D)	1	210354	210354	210354
17	Stator / Screen Kit	1	21040301	21040301	21040301
18	Seal-a-Matic™ Screen Assy	1	—	—	211292
BEARING / RISER-MOTOR ASSEMBLY					
10	Nozzle Housing O-Ring	1	210366	210366	210366
11	Arc Adjustment Stem O-Ring	1	211236	211236	211236
12	Arc Adjustment Stem	1	210420	210420	210420
13	Bearing Guide Assy, STD	1	211147	—	—
13	Bearing Guide Assy, LO-FLOW	1	—	(211263)	(211263)
14	Bearing Guide O-Ring	1	211242	211242	211242
15	Riser Motor Assembly	1	(210535)	(210535)	(210535)
16	Pop-up Seal (White)	1	210399	210399	210399
20	CASE ASSEMBLY See Catolog No. 010				

(A) Specify Nozzle Size when ordering. Available in # 51, 52, 53, 54.

(B) Also requires Seal-a-Matic™ Screen Assy Part # 211292

(C) For non-potable applications use standard part and purple snap ring part # 21192104

(D) Obsolete as of year end 2016.

Ref.	KITS & Accessories	Qty.	P/N
1	Snap-Cover, Black		21192101
1	Snap-Cover, Yellow		21192102
1	Snap-Cover, White		21192103
1	Snap-Cover, Purple (Non-Potable)		21192104
5	Cover, Yardage Marker Blank (White)		(21199603)
	Cover, Yardage Marker Blank (Black)		(21199601)
Diffuser Screw Kit (#52 & 53 only)			(21196452)
–	(Includes modified Range Nozzle)		(21196453)
7	Nozzle Housing, Drilled & Tapped	1	
8	Range Nozzle Assy, Modified	1	
–	Diffuser Screw (not shown)	1	
5	Cover, (Notched)	1	
9	Retract Seal	1	
6	Screw O-Ring	2	
-	Sod Cup Kit		212613

Stator / Poppet Configurations

Color	Number	Electric Pressure Setting psi (bars) 60 (4,1)	70 (4,8)	80 (5,5)	100 (6,9)	Hyd, SAM, B
Black	#51	S4	S4	S4	S4	S4
Beige	#52	S4	S4	S4	S4	S4
Gray	#53	S4	S4	S4	S4	S4
Red	#54	S8	S8	S8	S8	S8

S4 = Stator with 4 Holes S8 = Stator with 8 Holes

Stator with 4 Holes Stator with 8 Holes

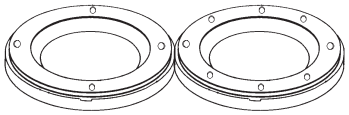

Note: Part numbers enclosed in brackets ( ) are not available individually, but may be sold in assemblies or kits.

TO BUY GENUINE RAIN BIRD PARTS, CONTACT YOUR LOCAL DISTRIBUTOR OR VISIT OUR ONLINE STORE AT WWW.RAINBIRD.COM

EAGLE™ 700 INTERNAL ASSEMBLY

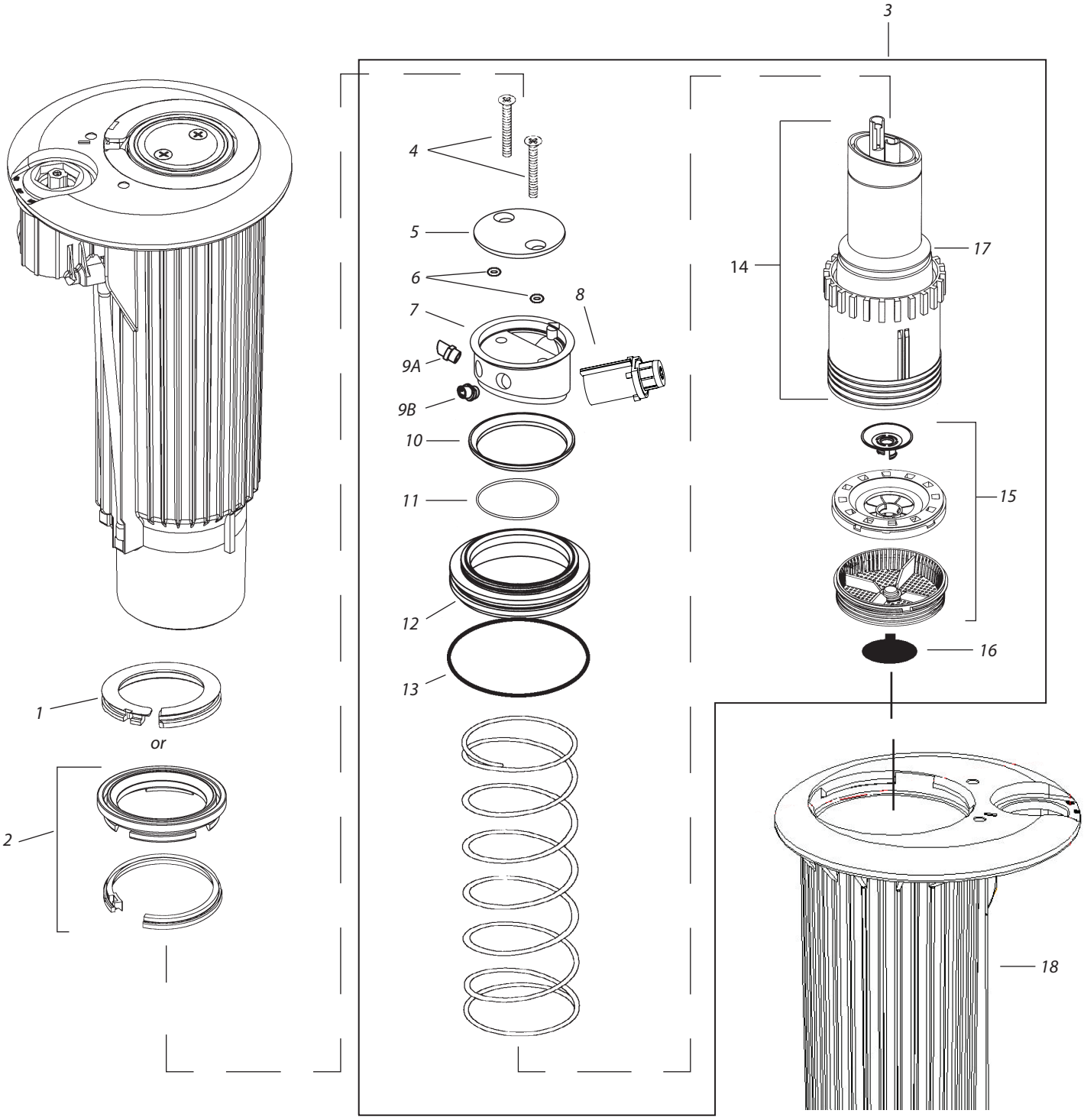

Note: Part numbers enclosed in brackets ( ) are not available individually, but may be sold in assemblies or kits.

EAGLE™ 700 INTERNAL ASSEMBLY

Ref.	Part Description	Qty.	700-E/IC	700-S/H	700B
	SNAP RINGS				
1	Snap Cover	1	21192101	21192101	21192101
2	Rubber Cover Kit	1	(212551)	(212551)	(211355)
	INTERNAL ASSEMBLY				
3	Internal Assembly (A)(B)(C)	1	(E) (214700xx)	(E) (214700xx)	(E) 214600xx
	COVER ASSEMBLY				
4	Self-Tapping Screw	2	210974	210974	210974
5	Housing Cover	1	213710	213710	213710
6	Cover Screw O-Ring	2	211236	211236	211236
	NOZZLES				
7	Dual Spreader Nozzle Housing - Black (B)(D)	1	213710	213710	213710
8	Range Nozzle Assembly (A)	1	213700xx	213700xx	213700xx
9A	Mid-Range Spreader Nozzle	1	See Diagram Below		
9B	Close-in Spreader Nozzle	1	See Diagram Below		
10	Retract Seal	1	210354	210354	210354
15	Stator/Screen Kit	1	21040301	21040301	21040301
	-Stator	1	—	—	—
	-Poppet	1	—	—	—
	-Screen	1	—	—	—
16	Seal-a-Matic Screen Assy	1	—	—	211292
	BEARING / RISER-MOTOR ASSEMBLY				
11	Nozzle Housing O-Ring	1	210366	210366	210366
12	Bearing Guide Assy, STD	1	211147	—	—
12	Bearing Guide Assy, LO-FLOW (E)	1	—	(211263)	(211263)
13	Bearing Guide O-Ring	1	211242	211242	211242
14	Riser Motor Assembly	1	(21470000)	(21470000)	(21470000)
17	Pop-up Seal (White)	1	210399	210399	210399
18	CASE ASSEMBLY See Catolog No. 010				

(A) Specify Nozzle Size when ordering. Available in # 28, 32, 36, 40, 44, 48.
(B) For Non-Potable applications, use standard part and purple snap ring (Part # 21192104)
(C) Replacement Internal Assembly - upgrade to Rain Bird 700
(D) Replacement Dual Spreader Nozzle Housing upgrade to Rain Bird 700 Nozzle Housing. Requires two (2) 700/751 Nozzle Housing Screws (Part # 214754).
(E) Also requires Seal-a-Matic™ Screen Assy (Part # 211292).

Ref.	KITS & Accessories	Qty.	P/N
1	Snap-Cover, Black		21192101
1	Snap-Cover, Yellow		21192102
1	Snap-Cover, White		21192103
1	Snap-Cover, Purple (Non-Potable)		21192104
5	Cover, Yardage Marker Blank (Black)		(21175201)
-	Sod Cup Kit		212613

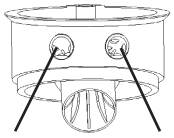

Mid-Range nozzle (9A)	Close-In nozzle (9B)
#28-36 Blue	Black With White
Part No.: 211562	Cascade Insert
#40-48 Black w/o insert	Part No.: 211452
Part No.: 211417	

Part #	Description
211562	Spreader Nozzle - Blue
213705	Spreader Nozzle - Blue W/Diffuser
211417	Spreader Nozzle - Black
211452	Spreader Nozzle - Black W/Diffuser
213701	Spreader Nozzle - Green
212291	Spreader Nozzle - Red
213702	Spreader Nozzle - Orange
211593	Spreader Nozzle Plug
213703	White Diffuser Insert - 500/550/700/750/751

Stator / Poppet Configurations - Dual Spreader & Cascade

Color	Number	Electric Pressure Setting psi (bars) 60 (4,1)	70 (4,8)	80 (5,5)	100 (6,9)	Hyd, SAM, B
White	#28 / 14C	SPC	SPC	SPC	SPC	SPC
Blue	#32 / 16C	SPO	SPO	SPO	SPO	SPO
Yellow	#36 / 18C	SPO	SPO	SPO	SPO	SPO
Orange	#40 / 20C	SNP	SNP	SNP	SNP	SNP
Green	#44 / 22C	SNP	SNP	SNP	SNP	SNP
Black	#48 / 24C	N/R	SNP	SNP	SPR	SNP

SPC = Stator with Poppet Closed
SPO = Stator with Poppet Open
SNP = Stator No Poppet
SO = Screen Only
SPR = Spacer and Screen
N/R = Not a Recommended Pressure and Nozzle Setting

Stator with Poppet Closed
Should be tight when snapped in

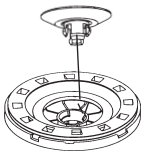

Stator with Poppet Open
Should be loose when snapped in

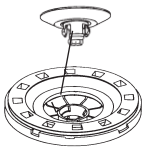

Note: Part numbers enclosed in brackets ( ) are not available individually, but may be sold in assemblies or kits.

TO BUY GENUINE RAIN BIRD PARTS, CONTACT YOUR LOCAL DISTRIBUTOR OR VISIT OUR ONLINE STORE AT WWW.RAINBIRD.COM

EAGLE™ 750 INTERNAL ASSEMBLY

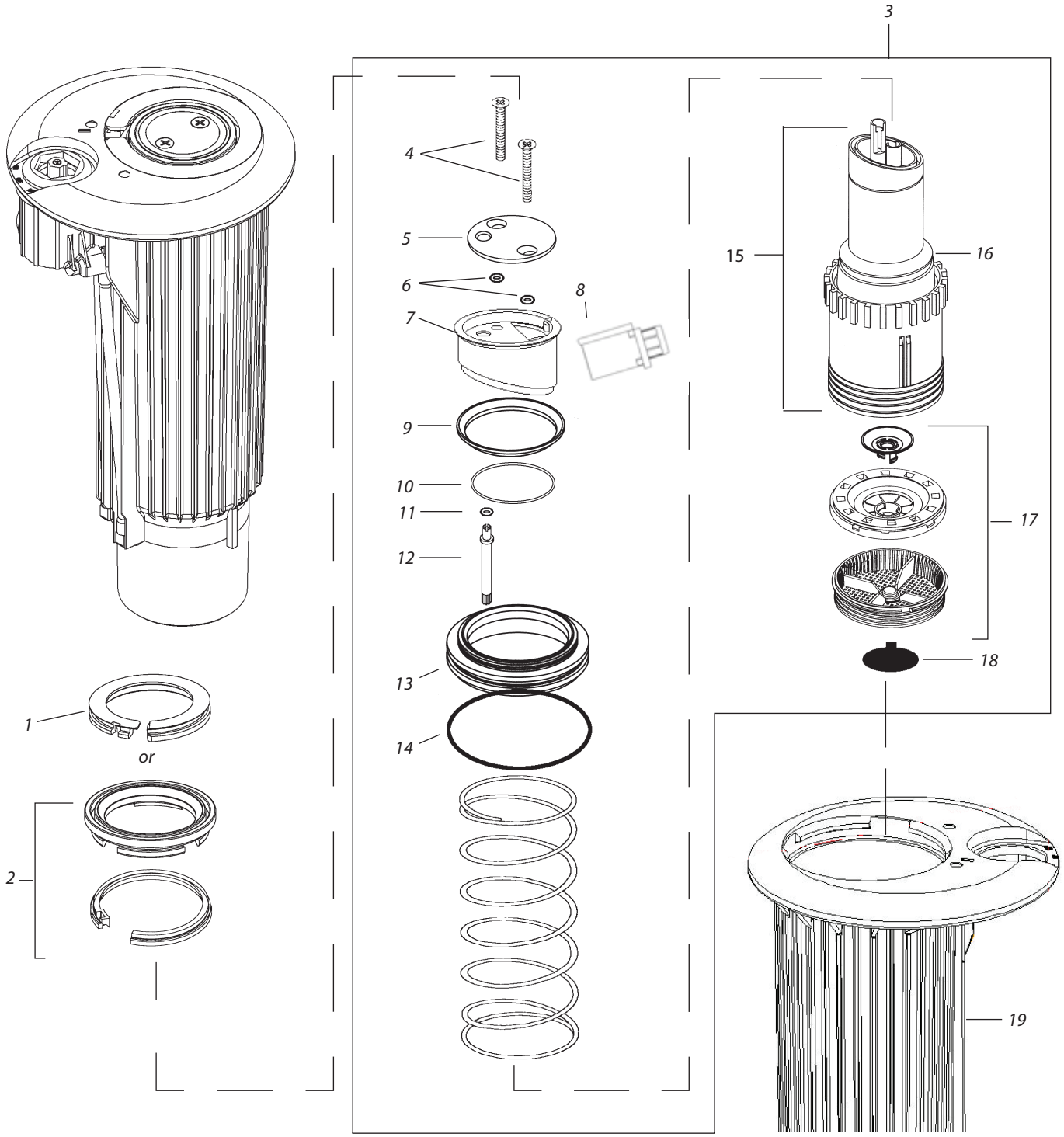

Note: Part numbers enclosed in brackets ( ) are not available individually, but may be sold in assemblies or kits.

EAGLE™ 750 INTERNAL ASSEMBLY

Ref.	Part Description	Qty.	750-E/IC	750-S/H	750B
SNAP RINGS					
1	Snap Cover	1	21192101	21192101	21192101
2	Rubber Cover Kit	1	(212552)	(212552)	(211355)
INTERNAL ASSEMBLY					
3	Internal Assembly (A)	1	(E) (214751xx)	(E) (214751xx)	(E) (214751xx)
COVER ASSEMBLY					
4	Self-Tapping Screw	2	210974	210974	210974
5	Housing Less Nozzle (D)	1	213760	213760	213760
6	Cover Screw O-Ring	2	211236	211236	211236
NOZZLES					
7	Dual-Spreader™ Nozzle Housing(B)(C)	1	21198201	21198201	21198201
8	Range Nozzle Assembly (A)	1	213750xx	213750xx	213750xx
9	Retract Seal	1	210354	210354	210354
17	Stator/Screen Kit	1	21040301	21040301	21040301
	-Stator	1	—	—	—
	-Poppet	1	—	—	—
	-Screen	1	—	—	—
18	Seal-a-Matic™ Screen Assy	1	—	—	211292
BEARING / RISER-MOTOR ASSEMBLY					
10	Nozzle Housing O-Ring	1	210366	210366	210366
11	Arc Adjustment Stem O-Ring	1	211236	211236	211236
12	Arc Adjustment Stem	1	210420	210420	210420
13	Bearing Guide Assy, STD	1	211147	—	—
13	Bearing Guide Assy, LO-FLOW	1	—	211263	(211263)
14	Bearing Guide O-Ring	1	211242	211242	211242
15	Riser Motor Assembly	1	(21475100)	(21475100)	(21475100)
16	Pop-up Seal (White)	1	210399	210399	210399
19	CASE ASSEMBLY See Catolog No. 010				

(A) Specify Nozzle Size when ordering. Available in # 28, 32, 36, 40, 44, 48.
To replace cascade nozzles (#14-24), double the nozzle number and upgrade to dual spreader nozzles. (eg. for #18 cascade, order #36 dual spreader.)

(B) For non-potable applications use standard part and purple snap ring (Part # 21192104)

(C) For casade nozzle housing upgrade to Dual-Spreader™ nozzle housing - Part # 21198201 and Nozzle - part # 213750xx

(D) Replacement housing - upgrade to Rain Bird 751.

(E) Also requires Seal-a-Matic™ Screen Assy (Part # 211292).

Ref.	KITS & Accessories	Qty.	P/N
1	Snap-Cover, Black		21192101
1	Snap-Cover, Yellow		21192102
1	Snap-Cover, White		21192103
1	Snap-Cover, Purple (Non-Potable)		21192104
5	Cover, Yardage Marker Blank (White)		(21199603)
5	Cover, Yardage Marker Blank (Black)		(21199601)
	Diffuser Screw Kit, Dual Spreader (B) (Without Nozzle)		212295
7	Nozzle Housing, Drilled & Tapped	1	
–	Diffuser Screw (not shown)	1	
5	Housing Cover (Notched)	1	
9	Retract Seal	1	
6	Cover Screw O-Ring	2	
	EAGLE'S TAIL KITS		
–	Dual-Spreader (without nozzle) (Black)		212287
7	Housing, Nozzle, Drilled in back	1	
–	Close-in Spreader Nozzle, 700	1	211452
5	Housing Cover	1	
9	Retract Seal	1	
6	Cover Screw O-Ring	2	
–	EAGLE's Tail Instruction Sheet	1	
-	Sod Cup Kit		212613

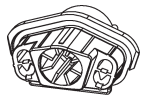

750 Dual-Spreader Nozzle

750 Cascade Nozzle (obsolete)

Stator with Poppet Closed

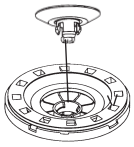

Should be tight when snapped in

Stator with Poppet Open

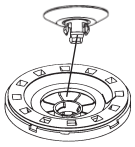

Should be loose when snapped in

Stator / Poppet Configurations - Dual-Spreader & Cascade

Color	Number	Electric Pressure Setting psi (bars) 60 (4,1)	70 (4,8)	80 (5,5)	100 (6,9)	Hyd, SAM, B
White	28/14C	SPC	SPC	SPC	SPC	SPC
Blue	32/16C	SPO	SPO	SPO	SPO	SPO
Yellow	36/18C	SPO	SPO	SPO	SPO	SPO
Orange	40/20C	SNP	SNP	SNP	SNP	SNP
Green	44/22C	SNP	SNP	SNP	SNP	SNP
Black	24C	SNP	SPR	SPR	SPR	SNP
Black	#48	SPR	SPR	SPR	SPR	SNP

SPC = Stator with Poppet Closed
SPO = Stator with Poppet Open
SNP = Stator No Poppet and Nozzle Setting
SPR = Spacer and Screen
N/R=Not a Recommended Pressure

Note: Part numbers enclosed in brackets ( ) are not available individually, but may be sold in assemblies or kits.

TO BUY GENUINE RAIN BIRD PARTS, CONTACT YOUR LOCAL DISTRIBUTOR OR VISIT OUR ONLINE STORE AT WWW.RAINBIRD.COM

EAGLE™ 900 INTERNAL ASSEMBLY

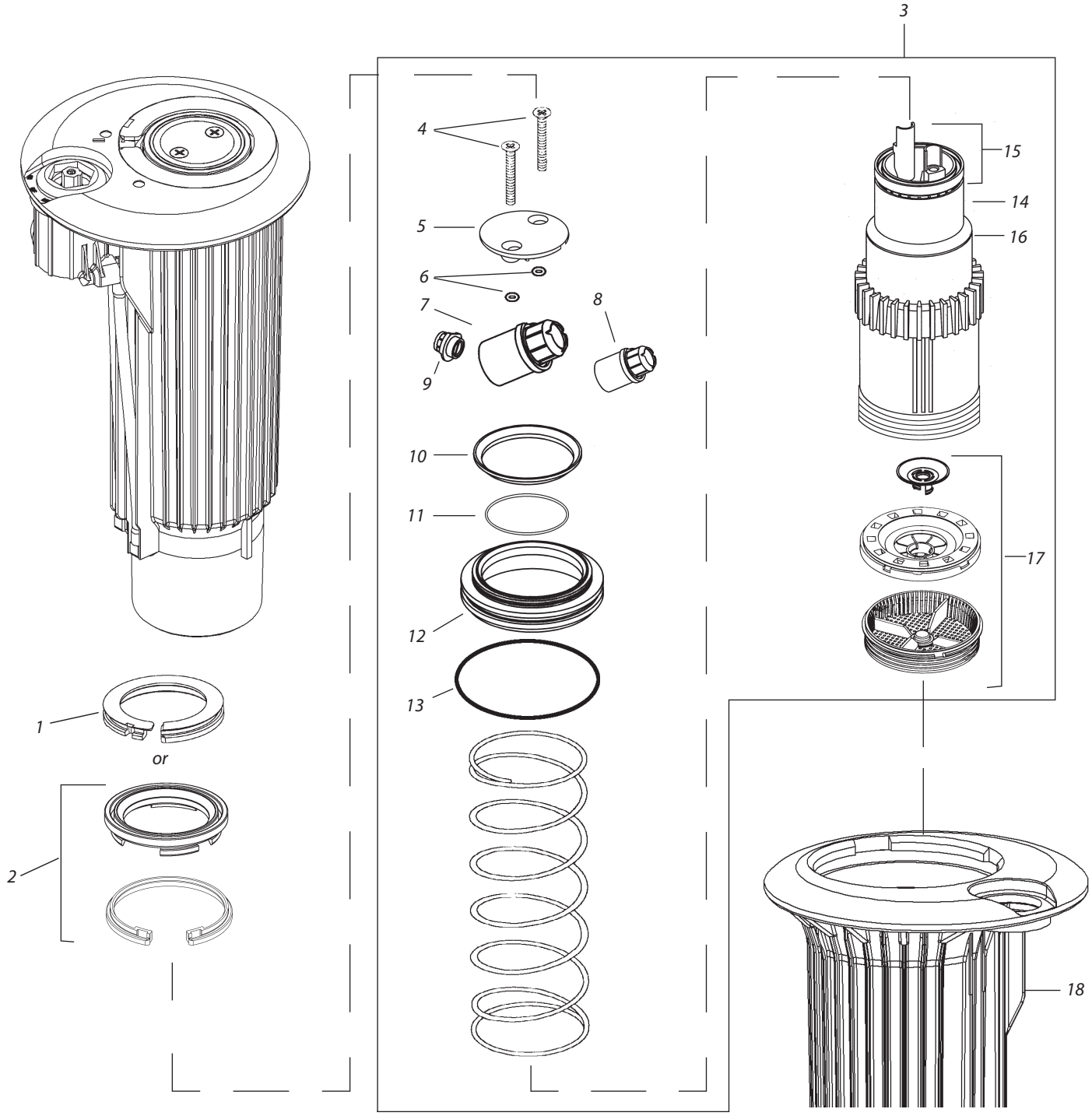

Note: Part numbers enclosed in brackets ( ) are not available individually, but may be sold in assemblies or kits.

EAGLE™ 900 INTERNAL ASSEMBLY

Ref.	Part Description	Qty.	900-E/IC	900-S/H
SNAP RINGS				
1	Snap Cover (all models)	1	21193401	21193401
2	Rubber Cover kit	1	(212553)	(212553)
INTERNAL ASSEMBLY				
3	Internal Assembly (A)(B)	1	210786xx	210786xx
COVER ASSEMBLY				
4	Self-Tapping Screw	2	210975	210975
5	Housing Cover	1	211966	211966
6	Screw O-Ring	2	209778	209778
NOZZLES				
7	Nozzle Housing - Black (B)(C)	1	211967	211967
8	Range Nozzle Assembly	1	213900xx	213900xx
9	Spreader Nozzle Assembly	1	See chart Below	
10	Retract Seal	1	210231	210231
17	Stator/Screen Kit	1	210232	210232
-	Poppet	1	—	—
-	Screen	1	—	—
-	Stator	1	—	—
BEARING / RISER-MOTOR ASSEMBLY				
11	Nozzle Housing O-Ring	1	210168	210168
12	Bearing Guide Assy, STD	1	211460	—
12	Bearing Guide Assy, LO-FLOW	1	—	(211461)
13	Bearing Guide O-Ring	1	212383	212383
14	Riser Motor Assembly	1	209836	209836
15	Nozzle Base Replacement Kit w/seals	1	(212060)	(212060)
16	Pop-up Seal (White)	1	209781	209781
18	CASE ASSEMBLY See Catalog No. 011			

(A) Specify Nozzle Size when ordering. Available in High Performance nozzle sizes # 44, 48, 52, 56, 60, 64.

(B) For Non-Potable applications, use standard part and purple snap ring - Part # 21193404

(C) The Nozzle Housing was changed 8/99 to accomodate the new Spreader for the High Performance nozzles. All 900 rotors and Nozzle/Housings manufactured after 8/99 have the new Nozzle Housing. Upgrade to High Performance Nozzle.

Spreader Nozzles	
If Range Nozzle is:	then use:
44 - 48	Part No.: 213904 (Blue)
52 - 64	Part No.: 213905 (Black)

Ref.	KITS & Accessories	Qty.	P/N
1	Snap-Cover, Black		21192101
1	Snap-Cover, Yellow		21193402
1	Snap-Cover, White		21193403
1	Snap-Cover, Purple (Non-Potable)		21193404
Diffuser Screw Kit			(B) 212144
(For high performance nozzeles 44-64)			
7	Nozzle Housing, Drilled & Tapped	1	
–	Diffuser Screw, installed	1	
5	Cover, (Notched)	1	
9	Spreader Nozzle Assembly	1	
10	Retract Seal	1	
6	Screw O-Ring	2	

Stator / Poppet Configurations - High Performance and Standard Nozzles

Color	Number	Electric Pressure Setting psi (bars) 60 (4,1)	70 (4,8)	80 (5,5)	100 (6,9)	Hyd, SAM, B
Blue	#44	SPC	SPC	SPC	SPC	SPC
Yellow	#48	SPC	SPC	SPC	SPO	SPC
Orange	#52	SPC	SPO	SPO	SPO	SPO
Green	#56	N/R	SNP	SNP	SNP	SNP
Black	#60	N/R	SNP	SPR	SPR	SPR
Red	#64	N/R	N/R	SPR	SPR	SPR
White	#18C	SPC	SPC	SPC	SPC	SPC
Gray	#20C	SPC	SPC	SPC	SPC	SPC
Blue	#22C	SPC	SPC	SPC	SPC	SPC
Yellow	#24C	SPC	SPC	SPO	SPO	SPO
Orange	#26	SPO	SPO	SPO	SPO	SPO
Green	#28	N/R	SNP	SPR	SPR	SPR
Black	#30	N/R	SNP	SPR	SPR	SPR
Brown	#32	N/R	N/R	SPR	SPR	SPR

SPC = Stator with Poppet Closed
SPO = Stator with Poppet Open
SNP = Stator No Poppet
SPR = Spacer
N/R=Not a Recommended Pressure and Nozzle Setting

Stator with Poppet Closed

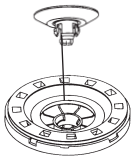

Should be tight when snapped in

Stator with Poppet Open

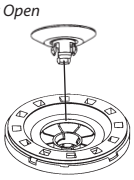

Should be loose when snapped in

Note: Part numbers enclosed in brackets ( ) are not available individually, but may be sold in assemblies or kits.

TO BUY GENUINE RAIN BIRD PARTS, CONTACT YOUR LOCAL DISTRIBUTOR OR VISIT OUR ONLINE STORE AT WWW.RAINBIRD.COM

EAGLE™ 950 INTERNAL ASSEMBLY

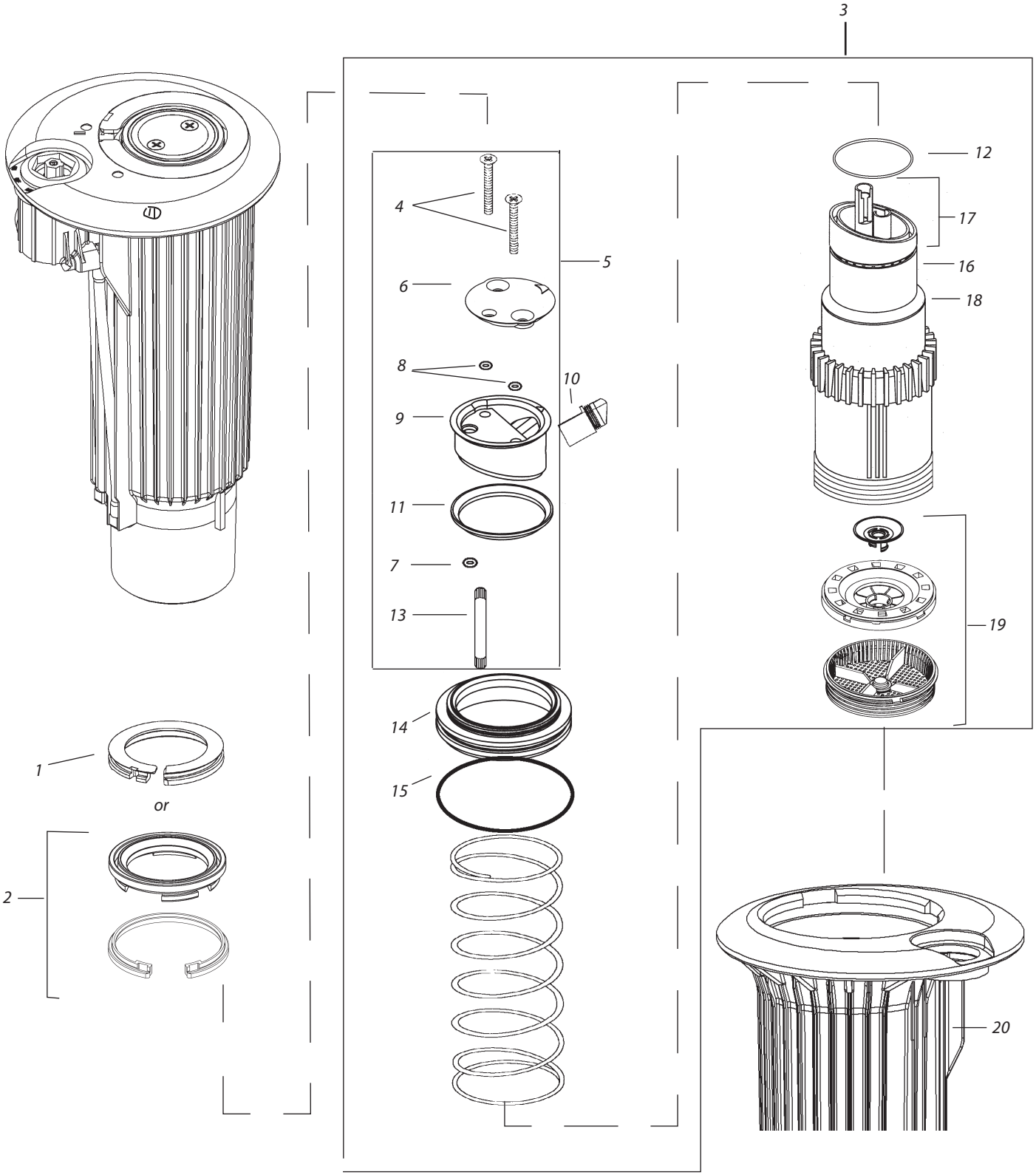

Note: Part numbers enclosed in brackets ( ) are not available individually, but may be sold in assemblies or kits.

EAGLE™ 950 INTERNAL ASSEMBLY

Ref.	Part Description	Qty.	950-E/IC	950-S/H
SNAP RINGS				
1	Snap Cover (all models)	1	21193401	21193401
2	Rubber Cover Kit	1	212554	212554
INTERNAL ASSEMBLY				
3	Internal Assembly (B,C)	1	211442xx	211442xx
COVER ASSEMBLY				
4	Self-Tapping Screw	2	210975	210975
5	One Piece Arc Adjust Conversion Kit(A)(B)	1	212893	212893
6	Housing Cover (on &after 11/06) (A)	1	(21282001)	(21282001)
8	Screw O-ring	2	209778	209778
NOZZLES				
9	Nozzle Housing-Black(on & after 11/06)(A)(B)	1	212822	212822
10	Range Nozzle Assembly (C)	1	213950xx	213950xx
11	Retract Seal	1	210231	210231
19	Stator/Screen Kit	1	210232	210232
	- Poppet		—	—
	- Stator		—	—
	- Screen		—	—
BEARING / RISER-MOTOR ASSEMBLY				
12	Nozzle Housing O-Ring	1	210436	210436
13	Adjustment Stem (on & after 11/06) (A)	1	—	—
14	Bearing Guide Assy, STD	1	211460	—
14	Bearing Guide Assy, LO-FLOW	1	—	(211461)
15	Bearing Guide O-Ring	1	212383	212383
16	Riser Motor Assembly	1	210439	210439
17	Nozzle Base Replacement Kit w/seals	1	(212061)	(212061)
18	Pop-up Seal (White)	1	209781	209781
20	CASE ASSEMBLY See Catolog No. 011			

(A) One Piece Arc Adjust incorporated 11/06. Prior to 11/06. Upgrade to the One Piece Arc Adjust Kit. Part # 212893.

(B) For non-potable applications, use standard part and purple snap ring - Part # 21193404.

(C) Specify Nozzle Size when ordering. Available in # 18, 20, 22, 24,26,28,30,32

Ref.	KITS & Accessories	Qty.	P/N
1	Snap-Cover, Black		21192101
1	Snap-Cover, Yellow		21193402
1	Snap-Cover, White		21193403
1	Snap-Cover, Purple (Non-Potable)		21193404
Rubber Cover Kit			(E)212554
-	Snap Ring Rubber cover	1	
-	Upper snap ring	1	
-	Housing Rubber cover	1	
-	Rubber Case Cover	1	
5	Cover, Yardage Marker Blank (White) (A)		(21214103)
5	Cover, Yardage Marker Blank (Black) (A)		(21214101)
Diffuser Screw Kit			(B)212145
9	Nozzle Housing, Drilled & Tapped	1	
–	Diffuser Screws	2	
5	Cover, Notched	1	
11	Retract Seal	1	
8	Screw O-Ring	2	
EAGLE's TAIL KIT (Black)			(B)211900
9	Housing, Nozzle, Drilled in back	1	
–	Close-in Spreader Nozzle, 700	1	211452
5	Housing cover	1	
11	Retract Seal	1	
8	Screw O-Ring	2	
	EAGLE's Tail Instruction Sheet	1	

Stator / Poppet Configurations - Cascade & Non-Cascade

Color	Number	Electric Pressure Setting psi (bars) 60 (4,1)	70 (4,8)	80 (5,5)	100 (6,9)	Hyd, SAM
White	#18C	SPC	SPC	SPC	SPC	SPC
Gray	#20C	SPC	SPC	SPC	SPC	SPC
Blue	#22C	SPC	SPC	SPC	SPC	SPC
Yellow	#24C	SPC	SPC	SPO	SPO	SPO
Orange	#26	SPO	SPO	SPO	SPO	SPO
Green	#28	N/R	SNP	SO	SO	SPR
Black	#30	N/R	SNP	SO	SO	SPR
Brown	#32	N/R	N/R	SO	SO	SPR

SPC = Stator with Poppet Closed
SPO = Stator with Poppet Open
SNP = Stator No Poppet
SPR = Spacer and Screen
SO = Screen Only
N/R=Not a Recommended Pressure and Nozzle Setting

Stator with Poppet Closed

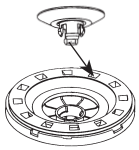

Should be tight when snapped in

Stator with Poppet Open

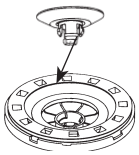

Should be loose when snapped in

Note: Part numbers enclosed in brackets ( ) are not available individually, but may be sold in assemblies or kits.

TO BUY GENUINE RAIN BIRD PARTS, CONTACT YOUR LOCAL DISTRIBUTOR OR VISIT OUR ONLINE STORE AT WWW.RAINBIRD.COM

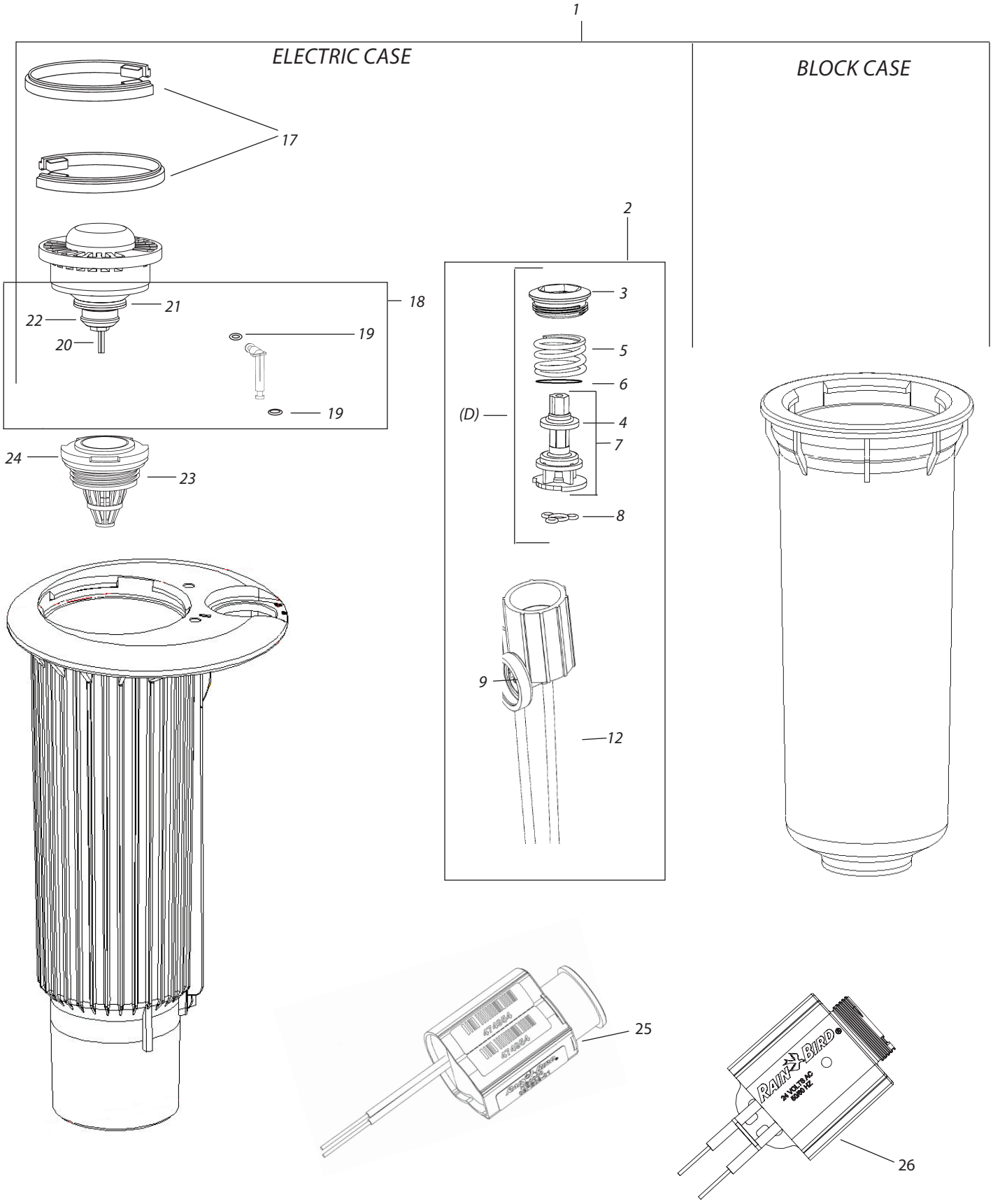

Note: Part numbers enclosed in brackets ( ) are not available individually, but may be sold in assemblies or kits.

EAGLE™ 500 / 550 / 700 / 750 SERIES

Ref.	Part Description	Qty.	Electric	SAM/Hydraulic	B case	IC
CASE ASSEMBLIES						
EAGLE™ 700 / 750						
1	Case Assembly (NPT)	1	(A)	(A)	(A)	(A)
–	Case Assembly (BSP)	1	(B) (G)	(G)	(H)	(G)
–	Case Assembly (ACME)	1	(B) 21246602C	212468	21148903	(B) 21338902
EAGLE™ 500 / 550						
1	Case Assembly (NPT)	1	(A)	(A)	(I)	—
–	Case Assembly (BSP)	1	(A)	(B,C,G)	(H)	—
–	Case Assembly (ACME)	1	(B,C)	212468	21148903	—
2	PRS/Selector Housing Assy (>6/95)	1	211418	—	—	—
3	Selector Cap	1	(D)	—	—	—
4	Stem Cover O-Ring	1	(D)	—	—	—
5	Compression Spring	1	(D)	—	—	—
6	Selector Spring Washer	1	(D)	—	—	—
7	PRS Cartridge, Upper Stem (Black)	1	(D)	—	—	—
8	Selector Seal (Green)	1	(D) 212244	—	—	—
9	Solenoid Base O-Ring	1	211237	—	—	—
10	Base Nut	1	(602606)	—	—	—
11	Plunger Core Tube Assy	1	(F) (21297201S)	—	—	—
12	Tubing	2	(E)211607	(E)211607	—	—
13	Solenoid Assy	1	213462C	—	—	—
14	U-Frame	1	(212124S)	—	—	—
15	Encapsulated Coil	1	602118	—	—	—
16	Solenoid Retainer	1	(627167)	—	—	—
17	Lower Snap Ring	2	210470	210470	—	—
18	Valve Assembly (700 / 750 Series)	1	211468	(212322)	—	—
18	Valve Assembly (500 / 550 Series)	1	212089S	(212322)	—	—
19	Probe O-Ring	2	211238	211238	—	—
20	Universal Filter	1	20609202	—	—	—
21	Inlet Rubber Seal	1	212328S	(212221)	—	—
22	Seal Nut	1	211174	—	—	—
23	Top-Serviceable Rock Screen (TSRS) (>4/98) (White)	1	21171401	21171401	—	—
24	O-Ring for TSRS (Yellow)	1	210366	210366	—	—
25	ICM Assembly	1	214010	—	—	—
9	Solenoid and ICM O-Ring	1	211237	—	—	—
26	GBS25 (Golf Black Solenoid 25kv)	1	213462C	—	—	—
KITS						
–	Tubing Repair Kit (E)	1	211607	—	—	—
–	Quick Connects for Tube Cuts	1	212159	212159	—	—
–	Rubber Cover Kit (B case Only)	1	—	—	211355	—
–	Rubber Cover Kit (500/550/700/750) - Smooth Case Rotor	1	(211602)	(211602)	—	—
–	Rubber Cover Kit (500/550/700/750) - Ribbed Case Rotor	1	(212551)	(212551)	—	—
-	Sod Cup Kit		212613	212613	212613	212613
TOOLS - For use on 500/550/700/750 Rotors						
–	Selector Service Tool Key (Orange Tool)	1	B41720	—	—	—
–	7" Selector Valve Key	1	D02215	—	—	—
–	18" Selector Valve Key	1	D02221	—	—	—
–	Snap Ring Pliers	1	D02236	D02236	—	—
–	Valve Insertion Tool	1	B41710	B41710	—	—
–	Installation Socket for TSRS	1	D02237	D02237	—	—
–	Universal Hose Adaptor	1	D05205	D05205	—	—

(A) 1 1/4" NPT cases not available. Upgrade to ACME case w/NPT to ACME adatper (212947S).
(B) Case assembly will come with a 70psi (4.8 bars) pressure setting
(C) Use EAGLE™ 700/750 case assembly and replace valve with 500/550 valve assembly (212089S)
(D) Included in PRS/Selector Repair Kit Post 4/01 use part 212150. Pre 4/01 part 213366 is no longer available.
(E) Tubing Repair Kit includes 20 tubes, ferrules and metal barbs.
(F) For salt water Plunger Core Tube Assy - use Part # 212732
(G) 1 1/4" BSP cases not available. Upgrade to ACME case w/ BSP to ACME adapter - Use part # (21337102)
(H) 1" BSP cases not available. Upgrade to ACME case w/ BSP to ACME adapter - Use part # (21337101)
(I) 1" NPT cases not available. Upgrade to ACME case w/ NPT to ACME adapter - use part # 21337001

Note: Part numbers enclosed in brackets ( ) are not available individually, but may be sold in assemblies or kits.

TO BUY GENUINE RAIN BIRD PARTS, CONTACT YOUR LOCAL DISTRIBUTOR OR VISIT OUR ONLINE STORE AT WWW.RAINBIRD.COM

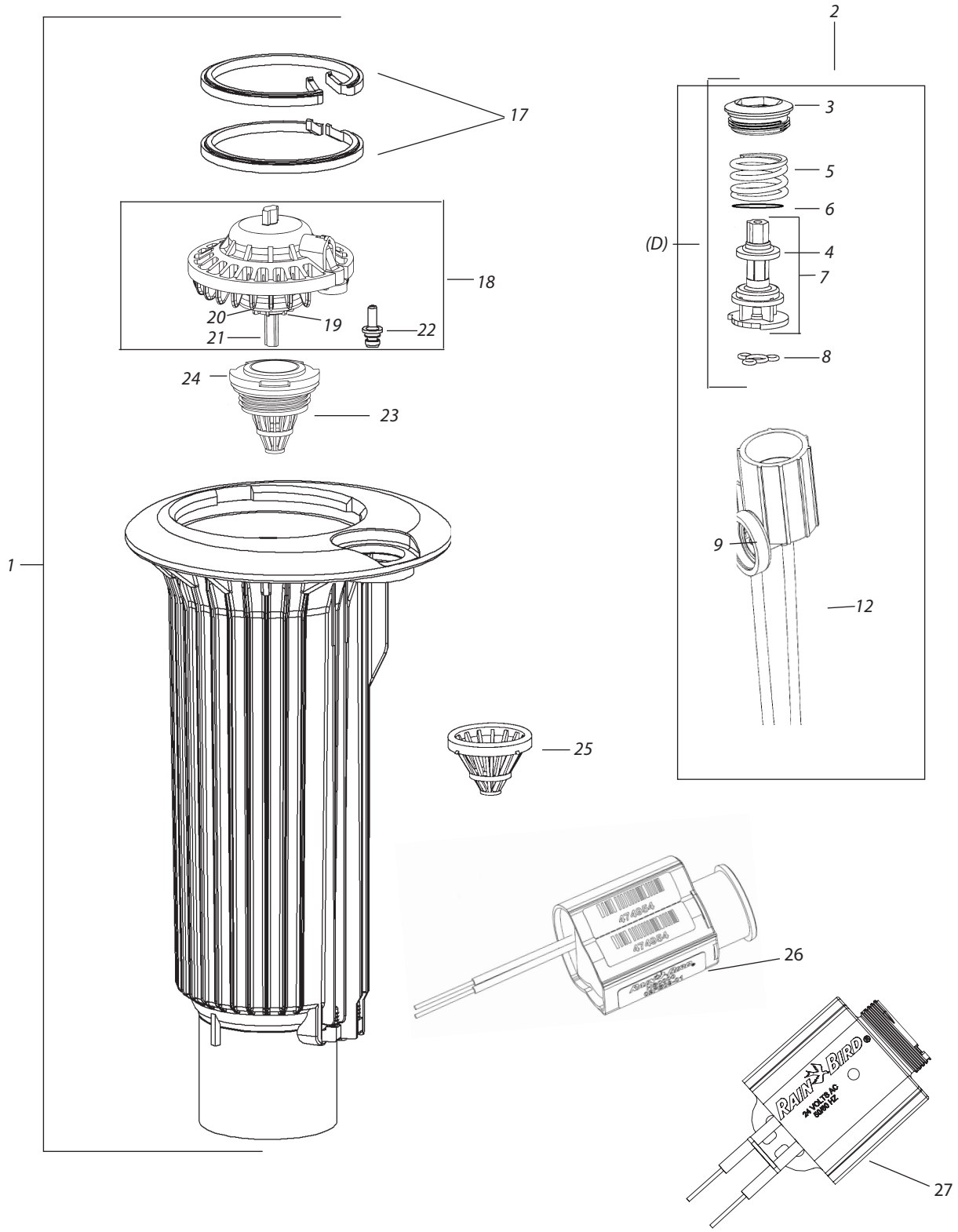

Note: Part numbers enclosed in brackets ( ) are not available individually, but may be sold in assemblies or kits.

EAGLE™ 900 / 950 / 1100 / 1150 / 115-E SERIES

Ref.	Part Description	Qty.	Electric	SAM / Hydraulic	IC
CASE ASSEMBLIES					
1	Case Assembly (NPT)	1	(A) 21246903	(B)	—
1	Case Assembly (BSP)	1	(F)	(F)	(F)
1	Case Assembly (ACME)	1	(C) 21247503C	212477(C)	(C) 21339003
2	PRS/Selector Housing Assy (>6/95)	1	(C) 211418	—	—
3	Selector cap	1	(D)	—	—
4	Stem Cover O-Ring	1	(D)	—	—
5	Compression Spring	1	(D)	—	—
6	Selector Washer	1	(D)	—	—
7	PRS Cartridge	1	(D)	—	—
8	Selector Seal (Green)	1	(D) 212244	—	—
9	Solenoide Base O-Ring	1	211237	—	—
10	Base Nut	1	(602606)	—	—
11	Plunger Core Tube Assy	1	—	—	—
12	Tubing	2	(E)211607	(E)211607	—
13	Solenoid Assembly Kit	1	213462C	—	—
14	Solenoid Retainer	1	(627167)	—	—
15	Solenoid U-Frame	1	(212124S)	—	—
16	Encapsulated Coil	1	602118	—	—
17	Lower Snap Ring (White)	2	208396	208396	—
18	HPDV Valve Assembly	1	211266	(212323)	—
19	Seal Nut (White)	1	211174	—	—
20	Rubber Inlet Seal	1	(211197)	212220S	—
21	Universal Filter	1	20609202	—	—
22	Probe & O-ring Assembly (Grey)	1	20740201	20740201	—
–	Probe O-Ring (Yellow)	1	211238	211238	—
23	Top-Serviceable Rock Screen (>9/98)	1	21171402	21171402	—
24	Rock Screen O-ring (Grey)	1	210366	210366	—
25	Inlet Screen (<9/98)	1	—	—	—
26	ICM Assembly	1	214010	—	—
9	Solenoid and ICM O-Ring	1	211237	—	—
27	GBS25 (Golf Black Solenoid 25kv)	1	213462C	—	—
KITS					
–	Tubing Repair Kit (E)	1	211607	—	—
–	Quick Connect for Tube Cuts	1	212159	212159	—
–	Rubber Cover Kit 950 - Ribbed Case	1	212554	212554	—
TOOLS - For use on 900/950/1100/1150/115E Rotors					
–	Selector Service Took Key (Orange Toll)	1	B41720	—	—
–	7" Selector Valve Key	1	D02215	—	—
–	18" Selector Valve Key	1	D02221	—	—
–	Snap Ring Pliers	1	D02203	D02203	—
–	Valve Insertion Tool	1	B41700	B41700	—
–	Installation Socket for TSRS	1	D02237	D02237	—
–	Universal Hose Adapter	1	D05205	D05205	—

(A) Only available in 80psi (5,5bars)
(B) 1 1/2" NPT Case not available. Upgrade to ACME case w/NPT to ACME adaptor - use part# 212948S
(C) Case Assemblies will be set to 80 psi (5.5 bars).
(D) Included in PRS/Selector Repair Kit Post 4/01 use part 212150. Pre 4/01 part 213366 is no longer available.
(E) Tubing repair Kit includes 20 tubes, ferrules and metal barbs.
(F) 1 1/2" BSP cases not available. Upgrade to ACME case w/ BSP to ACME adapter - Use part # (21337103)

Note: Part numbers enclosed in brackets ( ) are not available individually, but may be sold in assemblies or kits.

TO BUY GENUINE RAIN BIRD PARTS, CONTACT YOUR LOCAL DISTRIBUTOR OR VISIT OUR ONLINE STORE AT WWW.RAINBIRD.COM

EAGLE™ 1100 SERIES INTERNAL ASSEMBLY

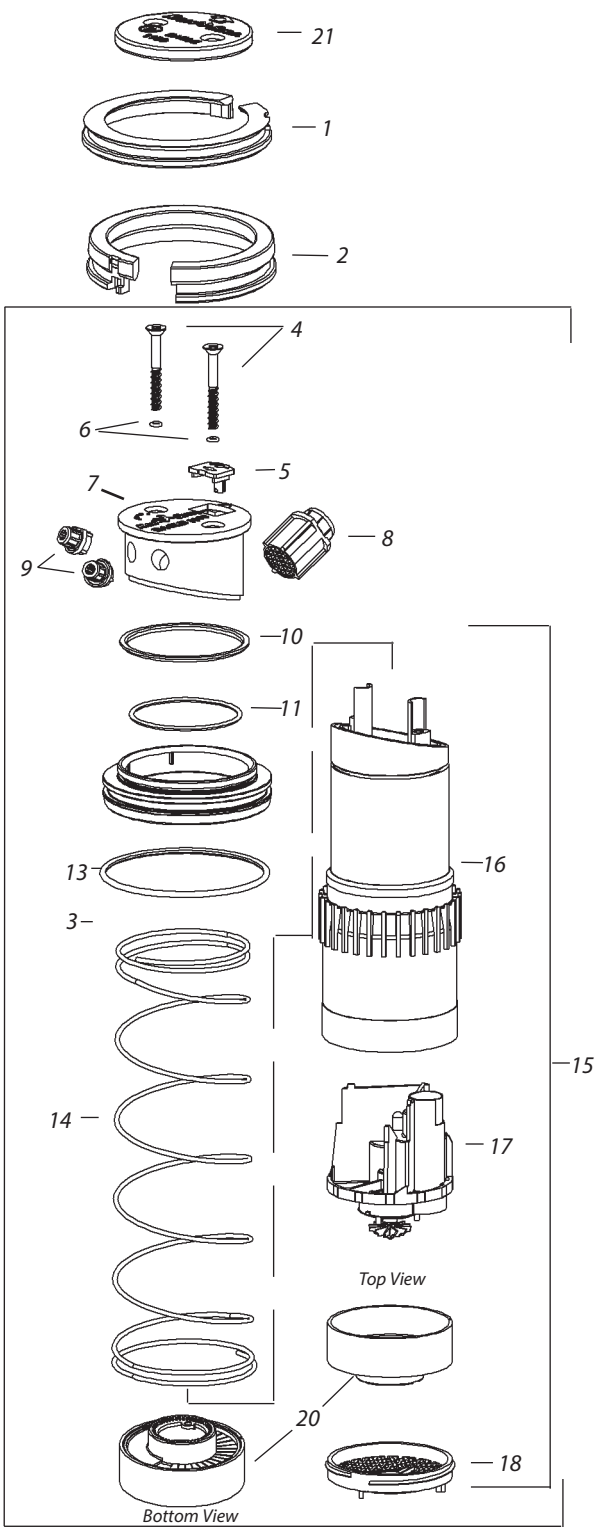

Ref.	Part Description	Qty	1100-E	1100-S	1100-H
SNAP RINGS					
1	Snap Cover (all models)	1	(21220401)	(21220401)	(21220401)
RUBBER COVER KIT		1	(212607)	(212607)	(212607)
2	Rubberized Snap Cover	1	—	—	—
21	Rubber Cover, Housing	1	(212266S)	(212266S)	(212266S)
6	Screw O-Ring	2	209778	209778	209778
INTERNAL ASSEMBLY					
3	Internal Assembly	1	(212438xx)	(212438xx)	(212438xx)
COVER ASSEMBLY					
4	Self Tapping Screw	2	210975	210975	210975
5	Diffuser Housing Insert	1	—	—	—
6	Screw O-Ring	2	209778	209778	209778
NOZZLES (Please specify nozzle size when ordering - See below)					
-	Nozzle/Housing Kit	1	(212602xx)	(212602xx)	(212602xx)
7	Nozzle Housing	1	—	—	—
8	Range Nozzle Assembly	1	(212604xxs)	(212604xxs)	(212604xxs)
9	Spreader Dual Nozzle Assembly	1	(212605xx)	(s212605xx)	(s212605xxs)
10	Retract Seal (Nozzle Housing)	1	—	—	—
18	Riser Screen	1	—	—	—
BEARING/RISER-MOTOR ASSEMBLY					
11	O-Ring Nozzle Housing	1	(212255S)	(212255S)	(212255S)
13	Bearing Guide O-Ring	1	212383	212383	212383
14	Retract Spring	1	(212162S)	(212162S)	(212162S)
15	Riser Motor Assembly	1	—	—	—
16	Riser - Seal Pop-Up	1	(212172)	(212172)	(212172)
17	Motor Housing (Replacement)	1	—	—	—
20	Stator Assembly - Common	1	(212606)	(212606)	(212606)
CASE ASSEMBLY (Please refer to EAGLE™ 900/950/1100/1150/115-E Series, catalog number 466)					

Stator Setting Configurations Factory

Number	Color of Range Nozzle	Electric Case Pressure Setting Psi (bars) 80(5.5)	100(6.9)	120 (8.3)	Hyd/SAM Set per Base Psi*
#48	Blue	10	11	12	10 - 12
#57	Yellow	11	12	13	11 - 13
#63	Orange	13	15	16	13 - 16
#66	Green	14	16	16	14 - 16

* Factory stator set for 80psi base pressure

Note: Stator settings to a lower number than factory will speed up rotation speed and shorten radius. Stator settings to a larger number than factory will slow rotation speed or cause non-rotation.

Note: Part numbers enclosed in brackets ( ) are not available individually, but may be sold in assemblies or kits.

EAGLE™ 1150 SERIES INTERNAL ASSEMBLY

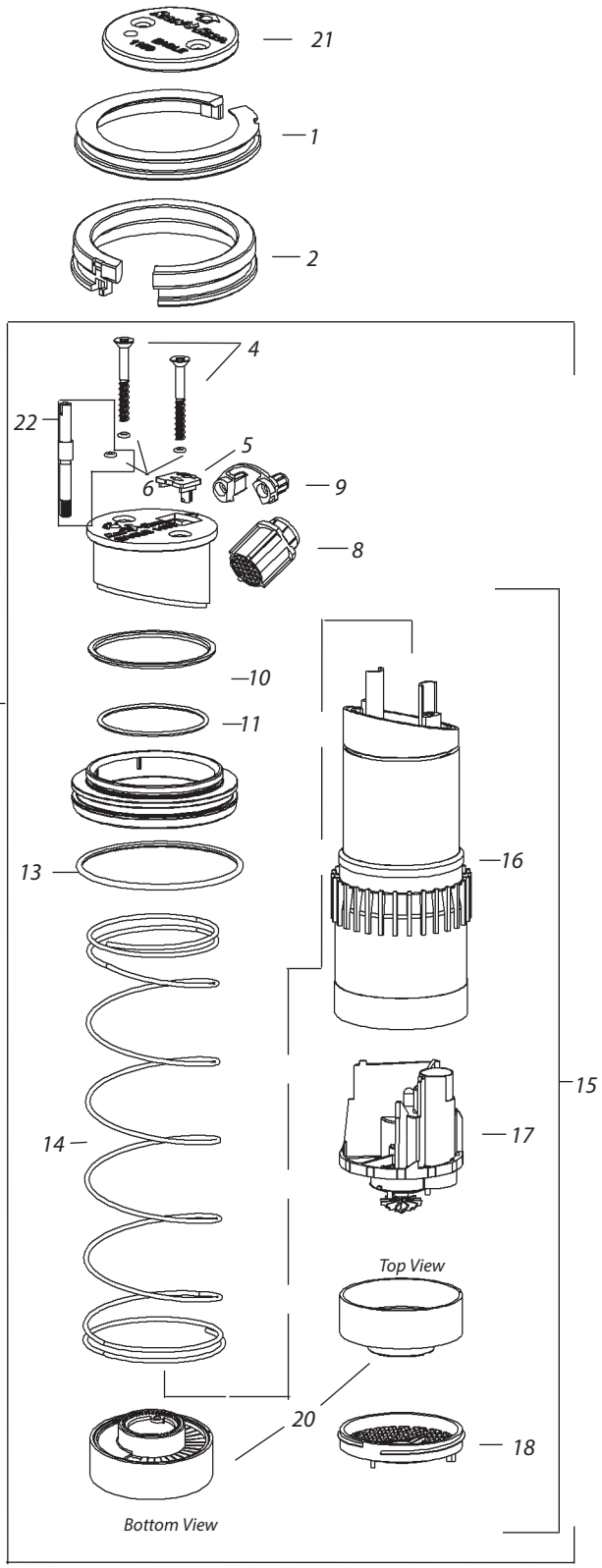

Ref.	Part Description	Qty	1150-E	1150-S	1150-H
SNAP RINGS					
1	Snap Cover (all models)	1	(21220401)	(21220401)	(21220401)
RUBBER COVER KIT		1	(212608S)	(212608S)	(212608S)
2	Rubberized Snap Cover	1	—	—	—
21	Housing Rubber Cover	1	—	—	—
6	Screw O-Ring	2	209778	209778	209778
INTERNAL ASSEMBLY					
3	Internal Assembly	1	(21243966S)	(21243966S)	(21243966S)
COVER ASSEMBLY					
4	Self Tapping Screw	2	210975	210975	210975
5	Diffuser Housing Insert	1	—	—	—
22	Arc Adjustment Shaft Assembly	1	—	—	—
6	Screw O-Ring	3	209778	209778	209778
NOZZLES (Please specify nozzle size when ordering - See below)					
-	Nozzle/Housing Kit	1	(212609xx)	(212609xx)	(212609xx)
-	Nozzle/Housing Kit (Purple)	1	(21261066)	(21261066)	(21261066)
7	Nozzle Housing	1	—	—	—
8	Range Nozzle Assembly	1	(212604xxs)	(212604xxs)	(212604xxs)
9	Spreader Dual Nozzle Assembly	1	(212611S)	(212611S)	(212611S)
10	Retract Seal (Nozzle Housing)	1	—	—	—
18	Riser Screen	1	—	—	—
BEARING/RISER-MOTOR ASSEMBLY					
11	O-Ring Nozzle Housing	1	(212255S)	(212255S)	(212255S)
13	Bearing Guide O-Ring	1	212383	212383	212383
14	Retract Spring	1	212162S	212162S	212162S
15	Riser Motor Assembly	1	(212436S)	(212436S)	(212436S)
16	Seal, Riser-Pop-Up	1	212172	212172	212172
17	Motor Housing (Replacement)	1	—	—	—
20	Stator Assembly - Common	1	(212606)	(212606)	(212606)

CASE ASSEMBLY (Please refer to EAGLE™ 900/950/1100/1150/11-E Series, catalog number 011)

Stator Setting Configurations Factory

Number	Color of Range Nozzle	Electric Case Pressure Setting Psi (bars) 80(5.5)	100(6.9)	120 (8.3)	Hyd/SAM Set per Base Psi*
#48	Blue	6	7	8	6 - 8
#57	Yellow	8	9	10	8 - 10
#63	Orange	10	11	12	10 - 12
#66	Green	12	13	14	12 - 14

* Factory stator set for 80psi base pressure

Note: Stator settings to a lower number than factory will speed up rotation speed and shorten radius. Stator settings to a larger number than factory will slow rotation speed or cause non- rotation.

Note: Part numbers enclosed in brackets ( ) are not available individually, but may be sold in assemblies or kits.

TO BUY GENUINE RAIN BIRD PARTS, CONTACT YOUR LOCAL DISTRIBUTOR OR VISIT OUR ONLINE STORE AT WWW.RAINBIRD.COM

RAIN BIRD 700 INTERNAL ASSEMBLY

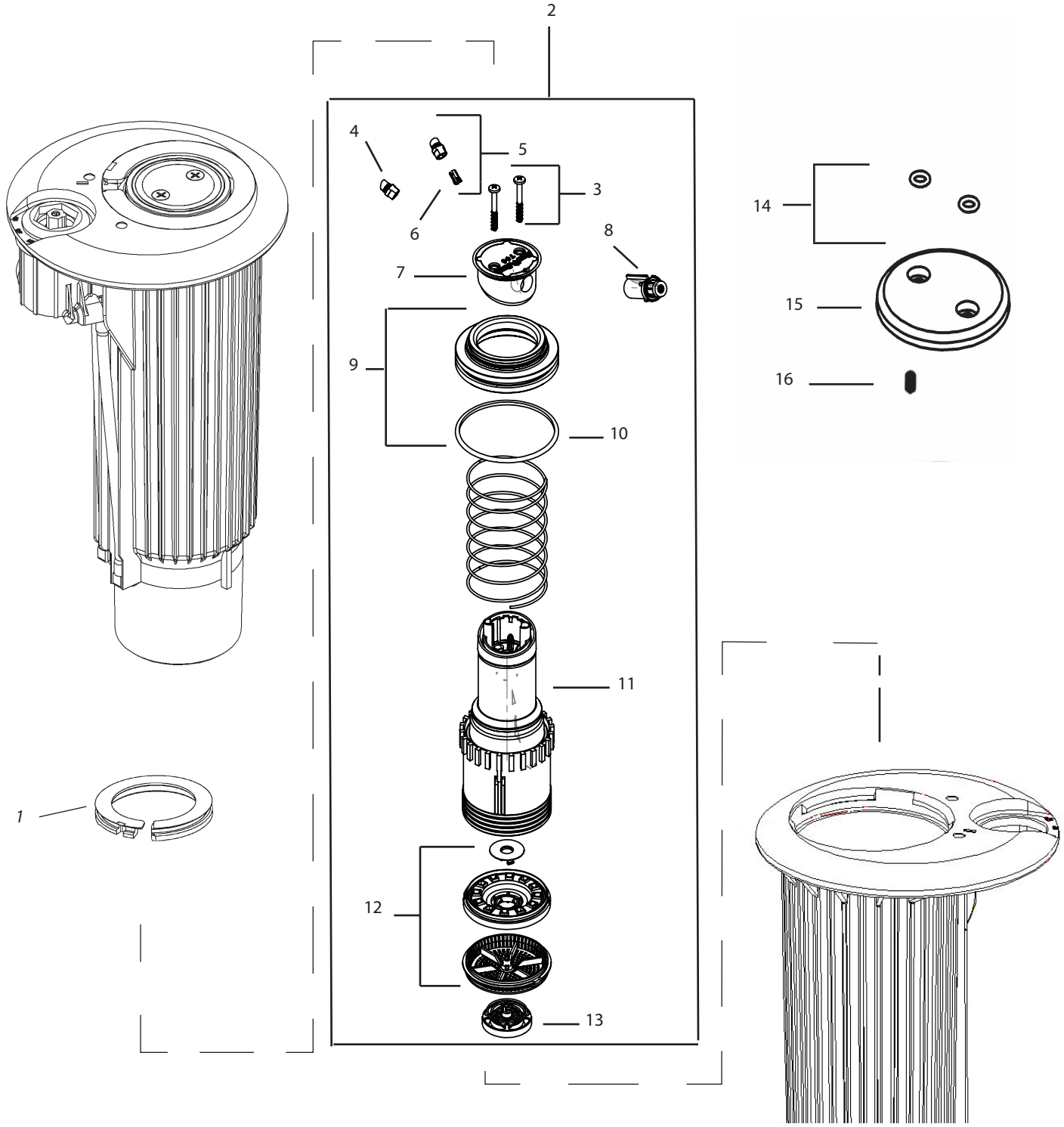

Note: Part numbers enclosed in brackets ( ) are not available individually, but may be sold in assemblies or kits.

RAIN BIRD 700 INTERNAL ASSEMBLY

Ref.	Part Description	Qty.	700-E/IC	700-S/H	700B
	SNAP RINGS				
1	Snap Cover	1	21192101	21192101	21192101
	INTERNAL ASSEMBLY				
2	Rain Bird 700 Internal Assembly (A) (B)	1	(214700xx)	(214700xx)	214600xx
	NOZZLE HOUSING AND NOZZLES				
3	700 / 751 Nozzle Housing Screw	2	214754	214754	214754
4	Blue Spreader Nozzle Standard (C)	1	211562	211562	211562
5	Black with White Diffuser Standard (C)	1	211452	211452	211452
6	White Diffuser	1	213703	213703	213703
7	700 Nozzle Housing Less Nozzles	1	213710	213710	213710
8	Range Nozzle and O-ring Assembly (A)	1	213700xx	213700xx	213700xx
	BEARING GUIDE / MOTOR ASSEMBLY				
9	Bearing Guide Assembly, Standard	1	211147	—	—
9	Bearing Guide Assembly, Low Flow	1	—	211263	211263
10	Bearing Guide O-ring	1	211242	211242	211242
11	Rain Bird 700 Riser Motor Assembly	1	(21470000)	(21470000)	(21470000)
12	700 / 750 / 751 Stator / Screen Kit	1	21040301	21040301	21040301
13	SAM Screen Kit Block Models	1	—	—	211292
17	Pop-up Seal (White)	1	210399	210399	210399
	KITS AND ACCESSORIES				
1	Snap Cover, Yellow	1	21192102	21192102	21192102
1	Snap Cover, White	1	21192103	21192103	21192103
1	Snap cover, Purple	1	21192104	21192104	21192104
-	Sod Cup Kit	1	212613	212613	212613
	DIFFUSER SCREW				
16	700 / 751 Diffuser Screw Only	1	214757	214757	214757

(A) Specify Nozzle Size when ordering. Available in # 28, 32, 36, 40, 44, or 48.
(B) For Non-Potable applications, use standard part and purple snap ring (Part # 21192104)
(C) Optional Spreader Nozzles 213701 (Green), 213702 (Orange), 213705 (Blue w/Diffuser), 212291 (Red), and 211417 (Black)

Stator / Poppet Configurations - Dual Spreader

Color	Number	Electric Pressure Setting psi (bars) 60 (4,1)	70 (4,8)	80 (5,5)	100 (6,9)	Hyd, SAM, B
White	#28	SPC	SPC	SPC	SPC	SPC
Blue	#32	SPO	SPO	SPO	SPO	SPO
Yellow	#36	SPO	SPO	SPO	SPO	SPO
Orange	#40	SNP	SNP	SNP	SNP	SNP
Green	#44	SNP	SNP	SNP	SNP	SNP
Black	#48	N/R	SNP	SNP	SPR	SNP

SPC = Stator with Poppet Closed
SPO = Stator with Poppet Open
SNP = Stator No Poppet
SO = Screen Only
SPR = Spacer and Screen
N/R = Not a Recommended Pressure and Nozzle Setting

Stator with Poppet Closed
Should be tight when snapped in

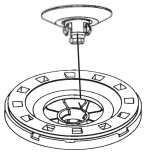

Stator with Poppet Open
Should be loose when snapped in

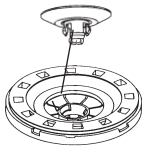

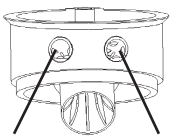

Mid-Range nozzle (9A)	Close-In nozzle (9B)
#28-36 Blue	Black With White
Part No.: 211562	Cascade Insert
#40-48 Black w/o insert	Part No.: 211452
Part No.: 211417	

Note: Part numbers enclosed in brackets ( ) are not available individually, but may be sold in assemblies or kits.

TO BUY GENUINE RAIN BIRD PARTS, CONTACT YOUR LOCAL DISTRIBUTOR OR VISIT OUR ONLINE STORE AT WWW.RAINBIRD.COM

RAIN BIRD 551 / 751 INTERNAL ASSEMBLY

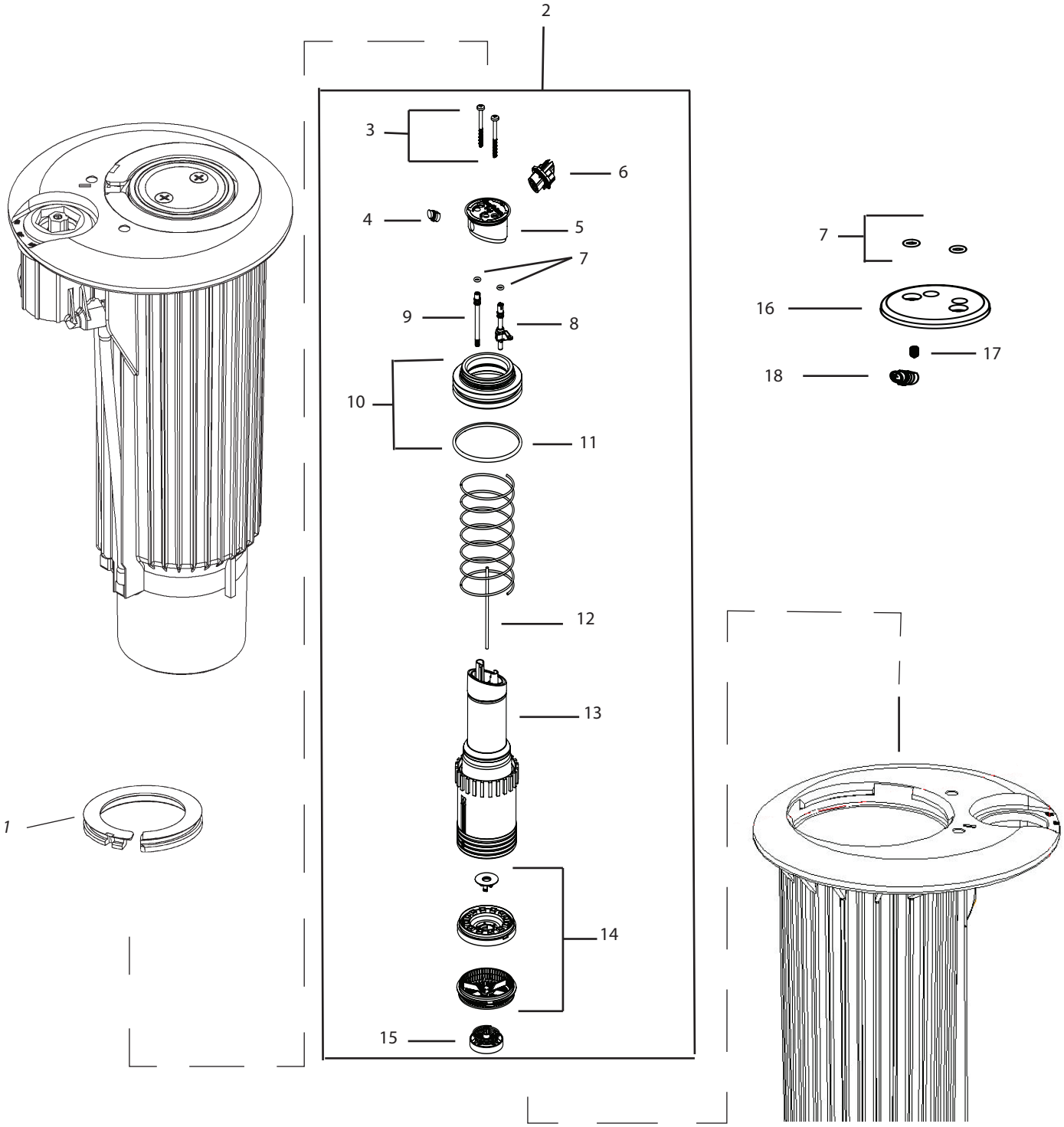

Note: Part numbers enclosed in brackets ( ) are not available individually, but may be sold in assemblies or kits.

RAIN BIRD 551 / 751 INTERNAL ASSEMBLY

Ref.	Part Description	Qty.	E/IC	S/H	B
	SNAP RINGS				
1	Snap Cover	1	21192101	21192101	21192101
	INTERNAL ASSEMBLY				
2	Rain Bird Internal Assembly (A) (B)	1	214751xx	214751xx	214651xx
	NOZZLE HOUSING AND NOZZLES				
3	Nozzle Housing Screw	2	214754	214754	214754
4	Nozzle plug	1	211593	211593	211593
5	Nozzle Housing Less Nozzle	1	213760	213760	213760
6	Standard Range Nozzle and O-Ring Assembly (C)	1	213750xx	213750xx	213750xx
6	Short Throw Range Nozzle and O-Ring Assembly (D)	1	213751xx	213751xx	213751xx
7	O-Ring (Cover, Adjust, & Lever)	2	211236	211236	211236
8	FC/PC Arm-Lever Assembly	1	214752	214752	214752
9	Arc Adjust Stem	1	210420	210420	210420
	BEARING GUIDE / MOTOR ASSEMBLY				
10	Bearing Guide Assembly, Standard	1	211147	—	—
10	Bearing Guide Assembly, Low Flow	1	—	(211263)	(211263)
11	Bearing Guide O-ring	1	211242	211242	211242
12	FC-PC Trip Rod	1	214753	214753	214753
13	Rain Bird 751 Riser Motor Assembly	1	(21475100)	(21475100)	(21475100)
14	Stator/Screen Kit	1	21040301	21040301	21040301
15	SAM Screen Kit Block Models	1	—	—	211292
19	Pop-up Seal (White)	1	(201399)	(201399)	(201399)
	KITS AND ACCESSORIES				
1	Snap Cover, Yellow	1	21192102	21192102	21192102
1	Snap Cover, White	1	21192103	21192103	21192103
1	Snap cover, Purple	1	21192104	21192104	21192104
-	Sod Cup Kit	1	212613	212613	212613
	DIFFUSER SCREW				
17	Diffuser Screw Only	1	214757	214757	214757
	SPREADER NOZZLES				
18	Rear Spreader Nozzles	1	(E)	(E)	(E)

(A) Specify Nozzle Size when ordering. Available in # 20, 22, 28, 32, 36, 40, 44, or 48.
(B)For Non-Potable applications, use standard part and purple snap ring (Part # 21192104)
(C) Specify Nozzle Size (28, 32, 36, 40, 44, or 48)
(D) Sprcify Nozzle Size (22 or 24)
(E) Optional Spreader Nozzles 213701 (Green), 213702 (Orange), 213705 (Blue w/Diffuser), 212291 (Red), and 211417 (Black)

Stator / Poppet Configurations - Dual Spreader

Color	Number	Electric Pressure Setting psi (bars) 60 (4,1)	70 (4,8)	80 (5,5)	100 (6,9)	Hyd, SAM, B
Gray	#20	S4	S4	S4	S4	S4
Red	#22	S8	S8	S8	S8	S8
White	#28	SPC	SPC	SPC	SPC	SPC
Blue	#32	SPO	SPO	SPO	SPO	SPO
Yellow	#36	SPO	SPO	SPO	SPO	SPO
Orange	#40	SNP	SNP	SNP	SNP	SNP
Green	#44	SNP	SNP	SNP	SNP	SNP
Black	#48	N/R	SNP	SNP	SPR	SNP

S4 = 4 Hole
SPC = Stator with Poppet Closed
SPO = Stator with Poppet Open
SNP = Stator No Poppet
S8 = 8 Hole
SO = Screen Only
SPR = Spacer and Screen
N/R = Not a Recommended Pressure and Nozzle Setting

Stator with Poppet Closed
Should be tight when snapped in

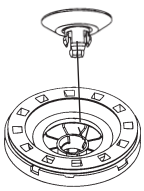

Stator with Poppet Open
Should be loose when snapped in

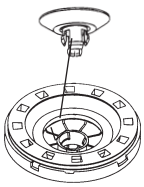

Note: Part numbers enclosed in brackets ( ) are not available individually, but may be sold in assemblies or kits.

TO BUY GENUINE RAIN BIRD PARTS, CONTACT YOUR LOCAL DISTRIBUTOR OR VISIT OUR ONLINE STORE AT WWW.RAINBIRD.COM

RAIN BIRD 552 / 752 INTERNAL ASSEMBLY

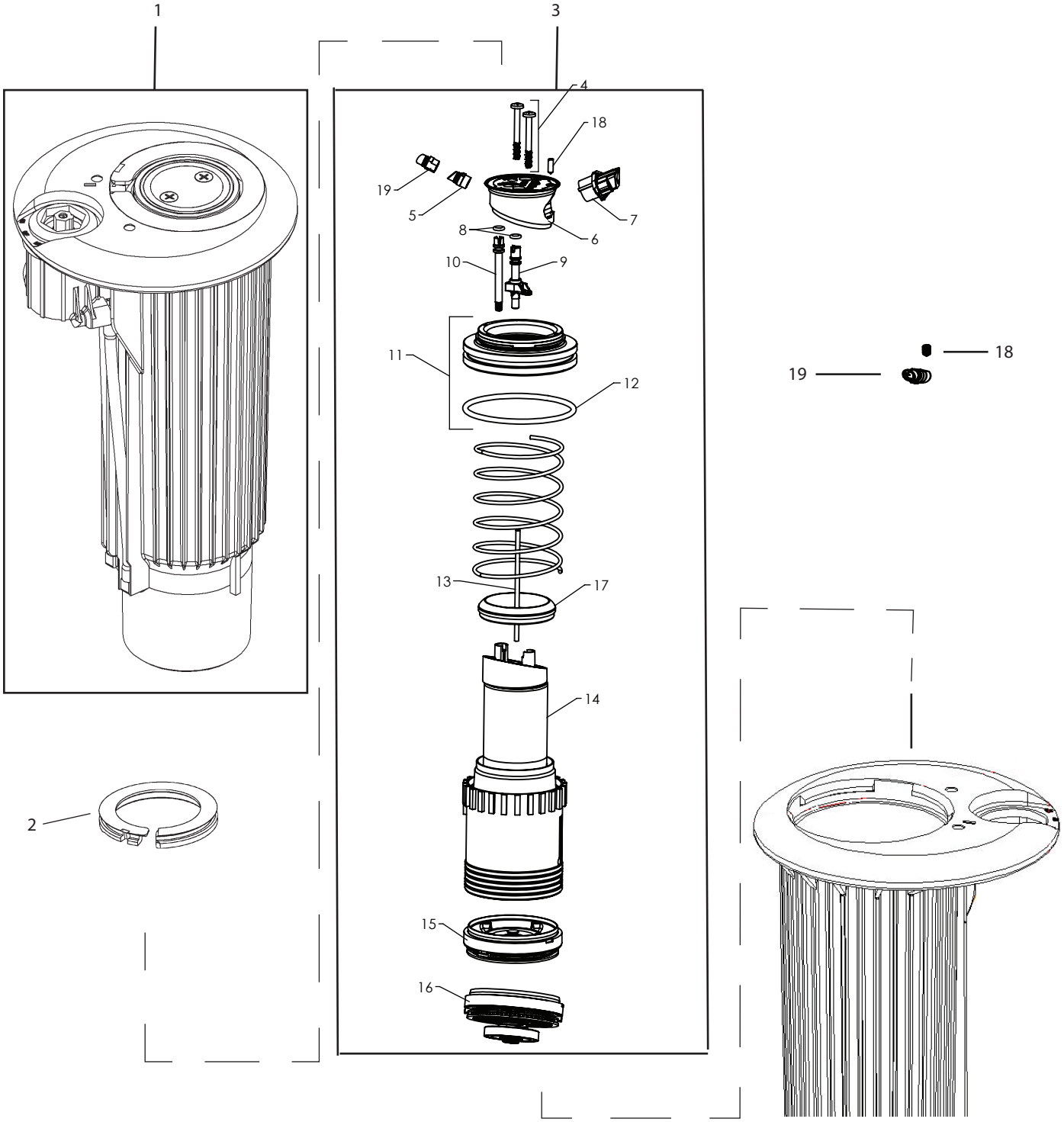

Note: Part numbers enclosed in brackets ( ) are not available individually, but may be sold in assemblies or kits.

RAIN BIRD 552 / 752 INTERNAL ASSEMBLY

Ref.	Part Description	Qty.	752-E, IC	752-B	552-B
1	Case Assembly				
SNAP RINGS					
2	Snap Cover (Excluding BRC)	1	21192101	21192101	21192101
INTERNAL ASSEMBLY					
3	Rain Bird 552 / 752 Internal Assembly (A) (B)	1	215752xx	(215755)**	(215555)**
NOZZLE HOUSING AND NOZZLES					
4	552 / 702 / 752 Nozzle Housing Screw	2	215003	215003	215003
5	Nozzle plug	1	211593	211593	—
6	552 / 702 / 752 Nozzle Housing Less Nozzle	1	215760	215760	215510
7	Standard Range Nozzle and O-Ring Assembly (C)	1	213750xx	213750xx	—
7	Standard Range Nozzle and O-Ring Assembly (F)	1	—	—	215520xx
7	Short Throw Range Nozzle and O-Ring Assembly (D)	1	213751xx*	213751xx	—
8	O-Ring (Cover, Adjust, & Lever)	2	211236	211236	211236
9	552 / 702 / 752 FC/PC Arm-Lever Assembly	1	214752	214752	214752
10	Arc Adjust Stem	1	210420	210420	210420
BEARING GUIDE / MOTOR ASSEMBLY					
11	Bearing Guide Assembly, Standard	1	211147	—	—
11	Bearing Guide Assembly, Low Flow	1	—	(211263)	(211263)
12	Bearing Guide O-ring	1	211242	211242	211242
13	FC-PC Trip Rod	1	214753	214753	214753
14	Rain Bird 752 Riser Motor Assembly	1	21575200	21575200	21555200
15	Self-Adjusting Stator Kit	1	21500000	—	—
16	Self-Adjusting Stator & SAM Screen Kit (Block Models)	1	—	21500100	21500100
17	Pop-up Seal (White)	1	(201399)	(201399)	(201399)
KITS AND ACCESSORIES					
2	Snap Cover, White	1	21192103	21192103	21192103
2	Snap cover, Purple	1	21192104	21192104	21192104
DIFFUSER SCREW					
18	Diffuser Screw Only	1	214757	214757	—
SPREADER NOZZLES					
19	Rear Spreader Nozzles	1	(E)	(E)	—

(A) Specify Nozzle Size when ordering. Available in # 18, 20, 22, 24, 26, 28, 32, 36, 40, 44, 48, 50.
(B) For Non-Potable applications, use standard part and purple snap ring (Part # 21192104)
(C) Specify Nozzle Size (28, 32, 36, 40, 44, 48, 50)
(D) Specify Nozzle Size (18, 20, 22, 24, 26)
(E) Optional Spreader Nozzles 211417 (Black), 211452 (Black w/Diffuser), 211562 (Blue), 212291 (Red), 213701 (Green), 213702 (Orange), and 213705 (Blue w/Diffuser)
(F) Specify Nozzle Size (51, 52, 53, 54)
* Requires low-flow valve in case assembly
** Block Internals DO NOT include main nozzles

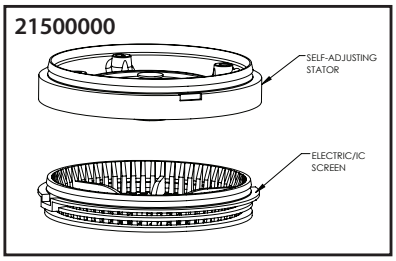

Stator Configuration Settings

Model	Nozzle	Pressure	Electric	IC	Block
552	Any	Any	—	—	SAS
752	Any	Any	SAS	SAS	SAS

SAS = Self Adjusting Stator

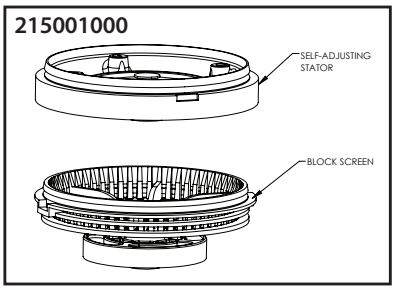

Note: Part numbers enclosed in brackets ( ) are not available individually, but may be sold in assemblies or kits.

TO BUY GENUINE RAIN BIRD PARTS, CONTACT YOUR LOCAL DISTRIBUTOR OR VISIT OUR ONLINE STORE AT WWW.RAINBIRD.COM

RAIN BIRD 952 INTERNAL ASSEMBLY

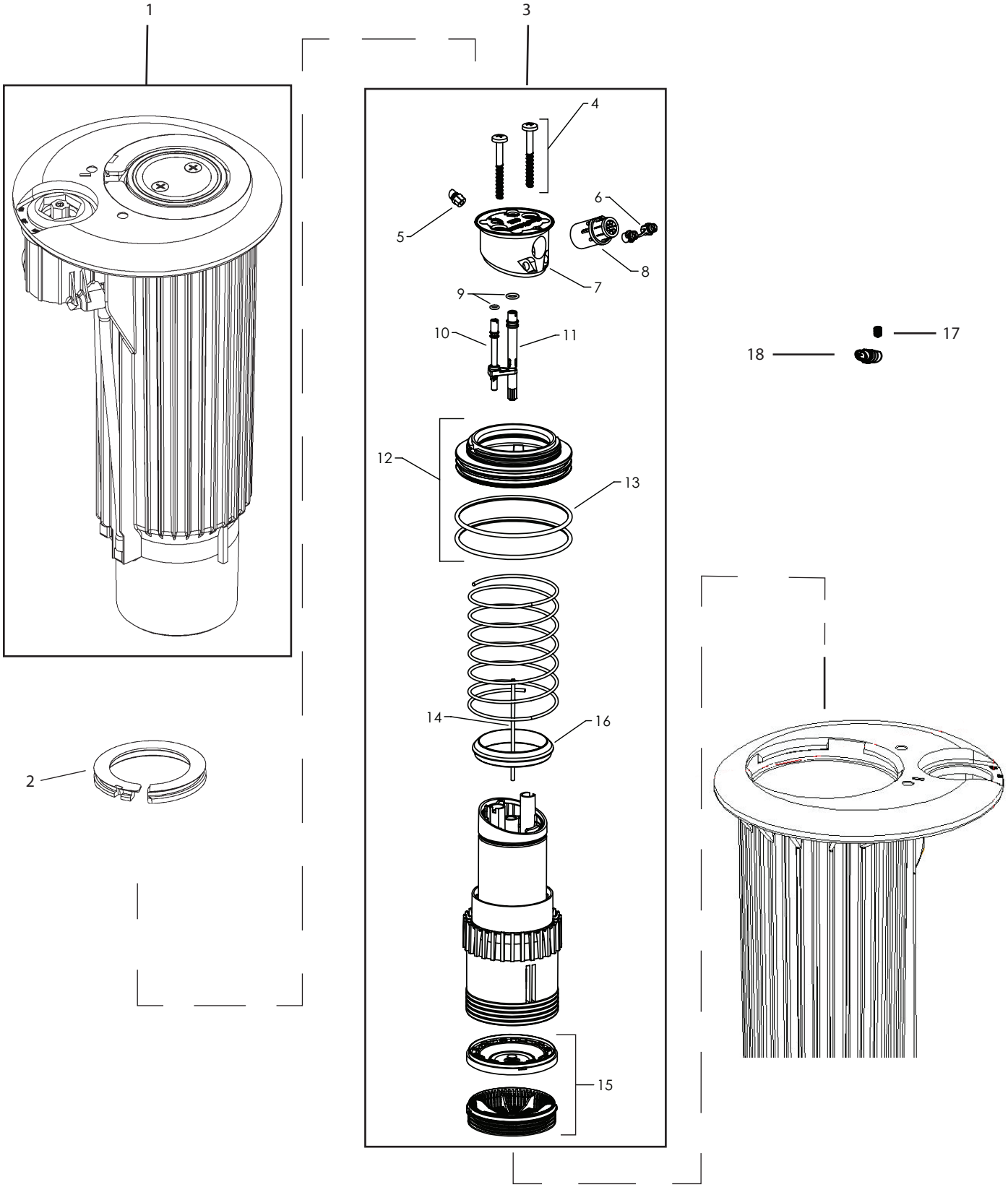

Note: Part numbers enclosed in brackets ( ) are not available individually, but may be sold in assemblies or kits.

RAIN BIRD 952 INTERNAL ASSEMBLY

Ref.	Part Description	Qty.	952-E, IC	952-B
1	Case Assembly (See Catalog No. 011)			
SNAP RINGS				
2	Snap Cover (Excluding BRC)	1	211934	211934
INTERNAL ASSEMBLY				
3	Rain Bird 952 Internal Assembly (A) (B)	1	2144XX	(215016)**
NOZZLE HOUSING AND NOZZLES				
4	952 Nozzle Housing Screw	2	910952	910952
5	Rear nozzle Plug	1	211593	211593
6	Spreader Nozzle	1	213952	213952
7	952 Nozzle Housing Less Nozzle	1	216952	216952
8	Standard Range Nozzle and O-Ring Assembly (C)	1	213900xx	213900xx
9	O-Ring (Adjust, & Lever)	2	211236	211236
10	952 FC - PC Stem	1	214952	214952
11	Arc Adjust Stem	1	217952	217952
BEARING GUIDE / MOTOR ASSEMBLY				
12	Bearing Guide Assembly, Standard	1	218952	—
13	Bearing Guide O-ring	2	212383	212383
14	FC-PC Rod	1	214952	214952
15	Self-Adjusting Stator Kit	1	21500000	—
16	Pop-up Seal (White)	1	209781	209781
KITS AND ACCESSORIES				
2	Snap Cover, White	1	21193403	21193403
2	Snap cover, Purple	1	21193404	21193404
DIFFUSER SCREW				
17	Diffuser Screw Only	1	212145	212145
SPREADER NOZZLES				
18	Rear Spreader Nozzles	1	(D)	(D)

(A) Specify Nozzle Size when ordering. Available in #44, #48, #52, #56, #60, #64.
(B) For Non-Potable applications, use standard part and purple snap ring (Part # 21193404)
(C) Specify Nozzle Size (#44, #48, #52, #56, #60, #64)
(D) Optional Spreader Nozzles 211417 (Black), 211452 (Black w/Diffuser), 211562 (Blue), 212291 (Red), 213701 (Green), 213702 (Orange), and 213705 (Blue w/Diffuser)
* Requires low-flow valve in case assembly
** Block Internals DO NOT include main nozzles

Stator Configuration Settings

Model	Nozzle	Pressure	Electric	IC	Block
752	Any	Any	SAS	SAS	SAS

SAS = Self Adjusting Stator

Note: Part numbers enclosed in brackets ( ) are not available individually, but may be sold in assemblies or kits.

TO BUY GENUINE RAIN BIRD PARTS, CONTACT YOUR LOCAL DISTRIBUTOR OR VISIT OUR ONLINE STORE AT WWW.RAINBIRD.COM

RAIN BIRD 702 INTERNAL ASSEMBLY

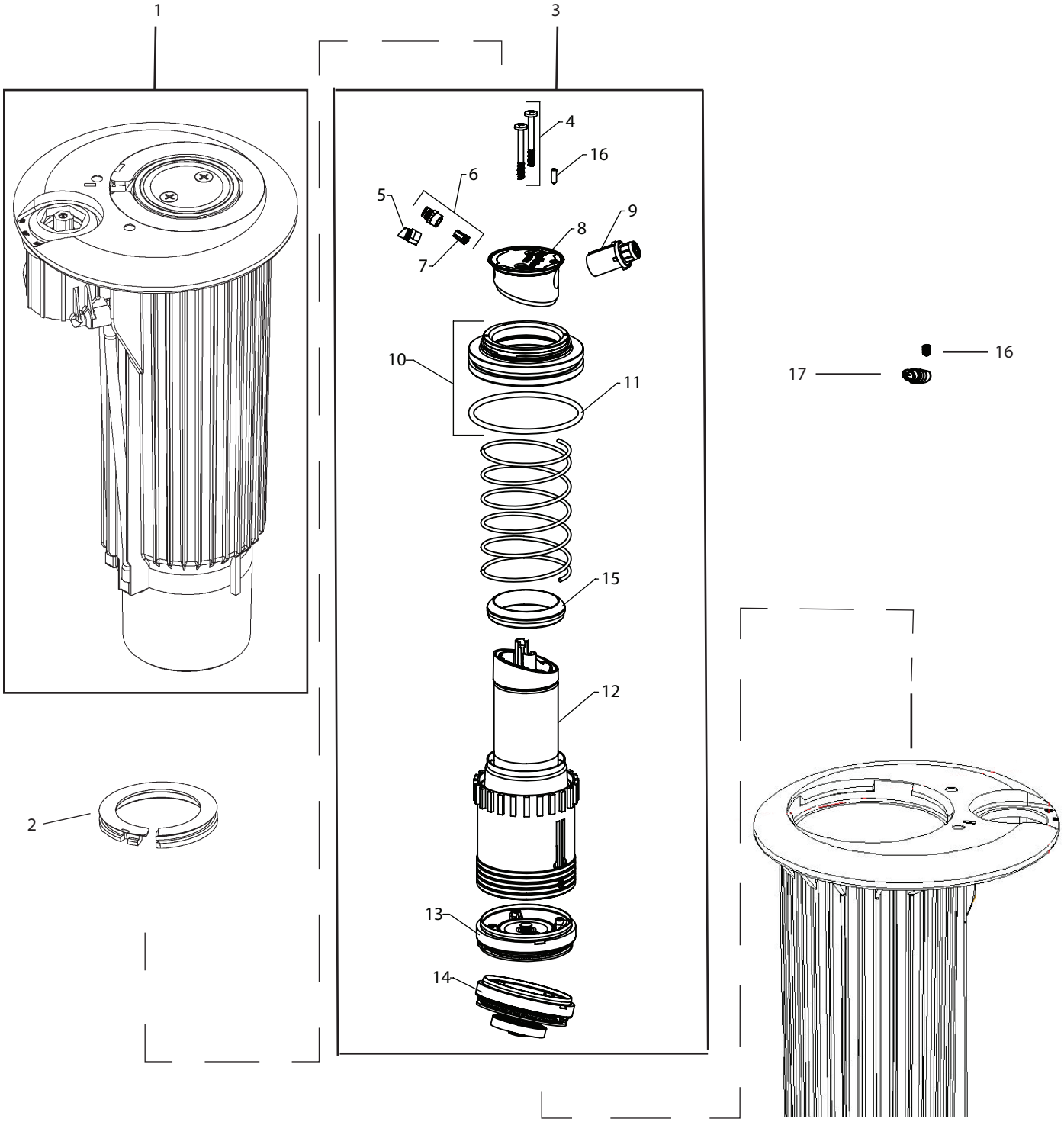

Note: Part numbers enclosed in brackets ( ) are not available individually, but may be sold in assemblies or kits.

RAIN BIRD 702 INTERNAL ASSEMBLY

Ref.	Part Description	Qty.	702-E, IC	702-B
1	Case Assembly			
SNAP RINGS				
2	Snap Cover (Excluding BRC)	1	21192101	21192101
INTERNAL ASSEMBLY				
3	Rain Bird 702 Internal Assembly (A) (B)	1	215702xx	215705*
NOZZLE HOUSING AND NOZZLES				
4	552 / 702 / 752 Nozzle Housing Screw	2	215003	215003
5	Blue Spreader Nozzle Standard (C)	1	211562	211562
6	Black with White Diffuser Standard (C)	1	211452	211452
7	White Diffuser	1	213703	213703
8	702 Nozzle Housing Less Nozzles	1	215710	215710
9	Range Nozzle and O-Ring Assembly (A)	1	213700xx	213700xx
BEARING GUIDE / MOTOR ASSEMBLY				
10	Bearing Guide Assembly, Standard	1	211147	—
10	Bearing Guide Assembly, Low Flow	1	—	(211263)
11	Bearing Guide O-ring	1	211242	211242
12	Rain Bird 702 Riser Motor Assembly	1	21570200	21570200
13	Self-Adjusting Stator Kit - Electric	1	21500000	—
14	Self-Adjusting Stator & SAM Screen Kit (Block Models)	1	—	21500100
15	Pop-up Seal (White)	1	(201399)	(201399)
DIFFUSER SCREW				
16	Diffuser Screw Only	1	214757	214757
SPREADER NOZZLES				
17	Rear Spreader Nozzles	1	(E)	—

(A) Specify Nozzle Size when ordering. Available in # 28, 32, 36, 40, 44, 48.
(B) For Non-Potable applications, use standard part and purple snap ring (Part # 21192104)
(C) Optional Spreader Nozzles 213701 (Green), 213702 (Orange), 213705 (Blue W/Diffuser), 211417 (Black), and 212291 (Red)
* Block internals DO NOT include nozzles

Stator Configuration Settings

Model	Nozzle	Pressure	Electric	IC	Block
702	Any	Any	—	—	SAS

SAS = Self Adjusting Stator

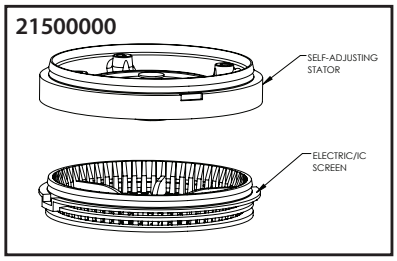

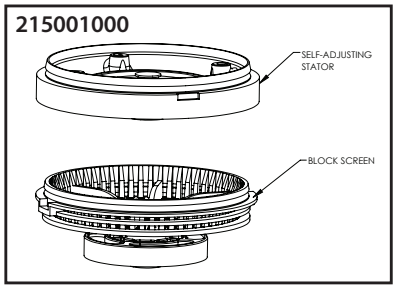

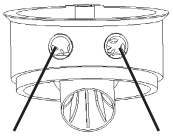

Mid-Range nozzle (9A)	Close-In nozzle (9B)
#28-36 Blue	Black With White
Part No.: 211562	Cascade Insert
#40-48 Black w/o insert	Part No.: 211452
Part No.: 211417	

Note: Part numbers enclosed in brackets ( ) are not available individually, but may be sold in assemblies or kits.

TO BUY GENUINE RAIN BIRD PARTS, CONTACT YOUR LOCAL DISTRIBUTOR OR VISIT OUR ONLINE STORE AT WWW.RAINBIRD.COM

SH-0 / SH-0-BSP / SH-1 / SH-2 / SH-2-BSP / SH-3

Ref.	Part Description	SH-0	BSP SH-0	SH-1	SH-2	BSP SH-2	SH-3
1	Elbow	(200449)	(201570)	(200449)	(200454)	(201572)	(200454)
2	O-Ring	(200451)	(200451)	(200451)	(200456)	(200456)	(200456)
3	Sleeve	(200783)	(202129)	(200785)	(200787)	(201571)	(200786)
4	Screw	(200784)	(200784)	(200784)	(200788)	(200788)	(200788)

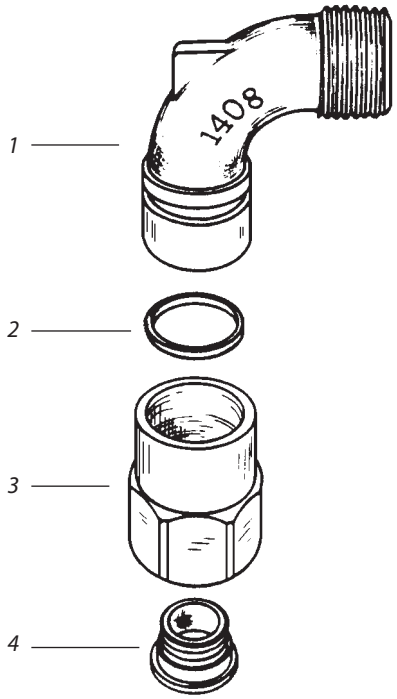

Note: Part numbers enclosed in brackets ( ) are not available individually, but may be sold in assemblies or kits.

ONE-PIECE QUICK COUPLER VALVES
3, 5, AND 7 SERIES

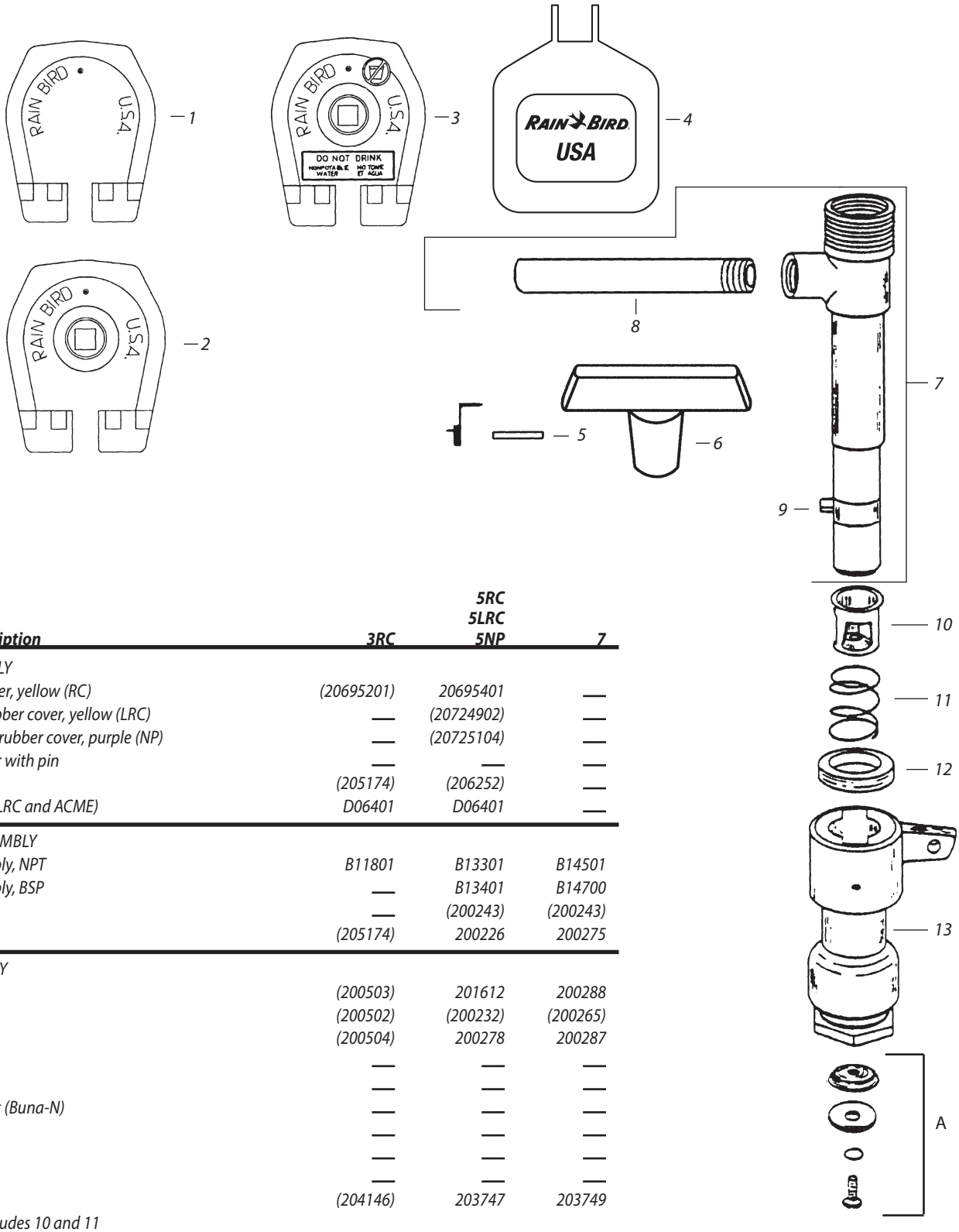

Ref	Part Description	3RC	5RC 5LRC 5NP	7
	COVER ASSEMBLY			
1	Rubber cover, yellow (RC)	(20695201)	20695401	—
2	Locking rubber cover, yellow (LRC)	—	(20724902)	—
3	NP locking rubber cover, purple (NP)	—	(20725104)	—
4	Metal cover with pin	—	—	—
5	Pin, cover	(205174)	(206252)	—
6	Cover key (LRC and ACME)	D06401	D06401	—
	VALVE KEY ASSEMBLY			
7	Key assembly, NPT	B11801	B13301	B14501
–	Key assembly, BSP	—	B13401	B14700
8	Handle	—	(200243)	(200243)
9	Pin	(205174)	200226	200275
	VALVE ASSEMBLY			
10	Cage	(200503)	201612	200288
11	Spring	(200502)	(200232)	(200265)
12	Gasket	(200504)	200278	200287
13	Body, NPT	—	—	—
–	Body, BSP	—	—	—
14	Rubber disc (Buna-N)	—	—	—
15	Retainer	—	—	—
16	Washer	—	—	—
17	Screw	—	—	—
A	Repair kit	(204146)	203747	203749
	3 series includes 10 and 11			

Note: Part numbers enclosed in brackets ( ) are not available individually, but may be sold in assemblies or kits.

TO BUY GENUINE RAIN BIRD PARTS, CONTACT YOUR LOCAL DISTRIBUTOR OR VISIT OUR ONLINE STORE AT WWW.RAINBIRD.COM

TWO-PIECE QUICK COUPLER VALVES
33 AND 44 SERIES

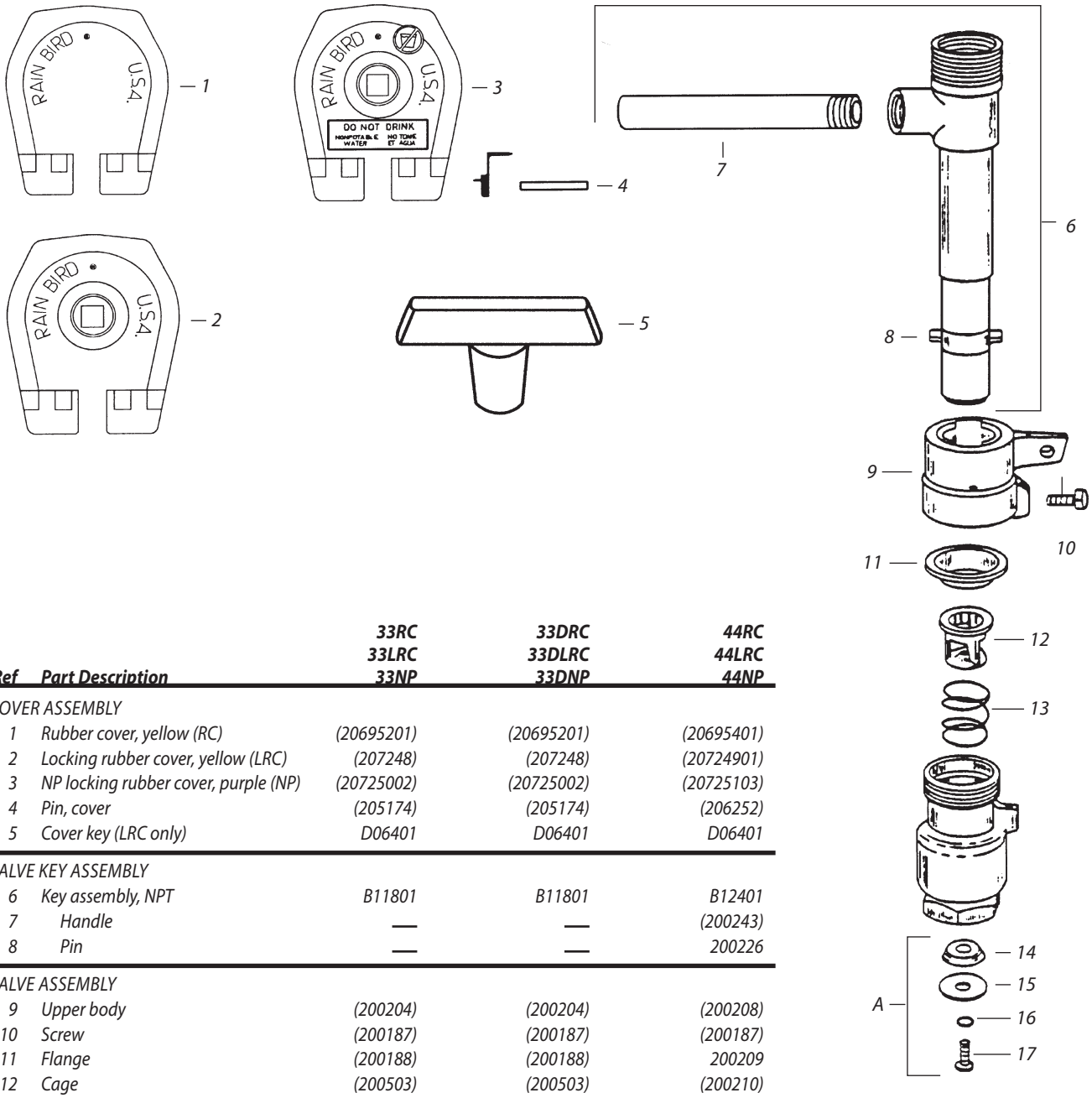

Ref	Part Description	33RC 33LRC 33NP	33DRC 33DLRC 33DNP	44RC 44LRC 44NP
COVER ASSEMBLY				
1	Rubber cover, yellow (RC)	(20695201)	(20695201)	(20695401)
2	Locking rubber cover, yellow (LRC)	(207248)	(207248)	(20724901)
3	NP locking rubber cover, purple (NP)	(20725002)	(20725002)	(20725103)
4	Pin, cover	(205174)	(205174)	(206252)
5	Cover key (LRC only)	D06401	D06401	D06401
VALVE KEY ASSEMBLY				
6	Key assembly, NPT	B11801	B11801	B12401
7	Handle	—	—	(200243)
8	Pin	—	—	200226
VALVE ASSEMBLY				
9	Upper body	(200204)	(200204)	(200208)
10	Screw	(200187)	(200187)	(200187)
11	Flange	(200188)	(200188)	200209
12	Cage	(200503)	(200503)	(200210)
13	Spring	(200502)	(200502)	200211
14	Rubber disc (Buna-N)	—	—	(200213)
15	Retainer	—	—	(200214)
16	Washer	—	—	(200215)
17	Screw	—	—	(205806)
A	Repair kit (33 series includes 12 and 13)	(204146)	(204146)	203747

Note: Part numbers enclosed in brackets ( ) are not available individually, but may be sold in assemblies or kits.

GSV (GOLF SOLENOID VALVE) – ELECTRIC AND IC

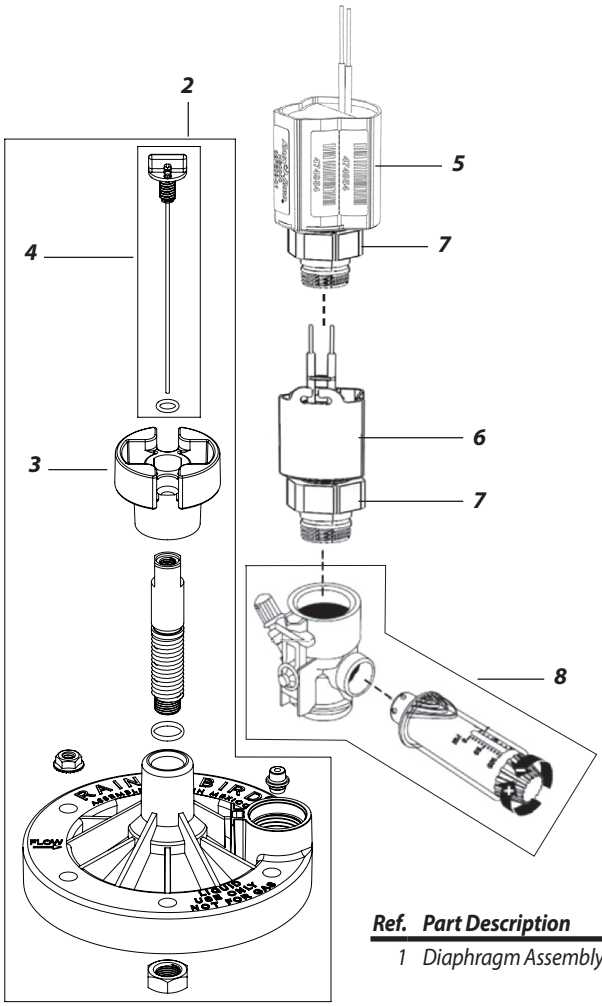

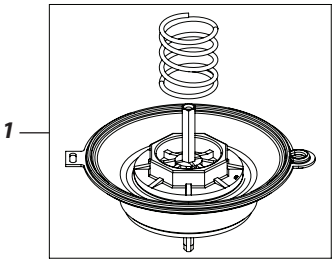

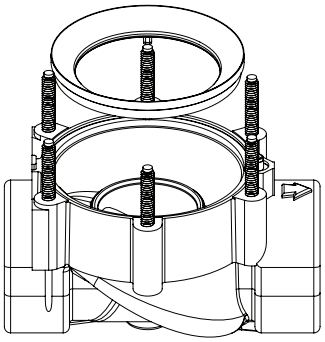

Ref.	Part Description	GSV100	GSVIC100	GSV150	GSVIC150	GSV200	GSVIC200
1	Diaphragm Assembly	208143	208143	(234882S)	(234882S)	(208605)	(208605)
		20814402	20814402	(23486602S)	(23486602S)	(20851802)	(20851802)
		(20814404S)	(20814404S)	(23486604S)	(23486604S)	(20851804S)	(20851804S)
2	Bonnet Assembly	(20936701)	(20936701)	(20936702)	(20936702)	(20936702)	(20936702)
3	Handle NP	231230	231230	231232	231232	231232	231232
4	Bleed Screw Assembly	204152	204152	204152	204152	204152	204152
5	IC Module	—	214010	—	214010	—	214010
6	Solenoid (GBS25)	213462C	—	213462C	—	213462C	—
7	ICMA	214011	214011	214011	214011	214011	214011
8	PRS-Dial	B33135	B33135	B33135	B33135	B33135	B33135

Ref.	Part Description	GSV101	GSVIC101	GSV151	GSVIC151	GSV201	GSVIC201
1	Diaphragm Assembly	208143	208143	(234882S)	(234882S)	(208605)	(208605)
		20814402	20814402	(23486602S)	(23486602S)	(20851802)	(20851802)
		(20814404S)	(20814404S)	(23486604S)	(23486604S)	(20851804S)	(20851804S)
2	Bonnet Assembly	(20936701)	(20936701)	(20936702)	(20936702)	(20936702)	(20936702)
3	Handle NP	231230	231230	231232	231232	231232	231232
4	Bleed Screw Assembly	204152	204152	204152	204152	204152	204152
5	IC Module	—	214010	—	214010	—	214010
6	Solenoid (GBS25)	213462C	—	213462C	—	213462C	—
7	ICMA	214011	214011	214011	214011	214011	214011
8	PRS-Dial	B33135	B33135	B33135	B33135	B33135	B33135

Note: Part numbers enclosed in brackets ( ) are not available individually, but may be sold in assemblies or kits.

TO BUY GENUINE RAIN BIRD PARTS, CONTACT YOUR LOCAL DISTRIBUTOR OR VISIT OUR ONLINE STORE AT WWW.RAINBIRD.COM

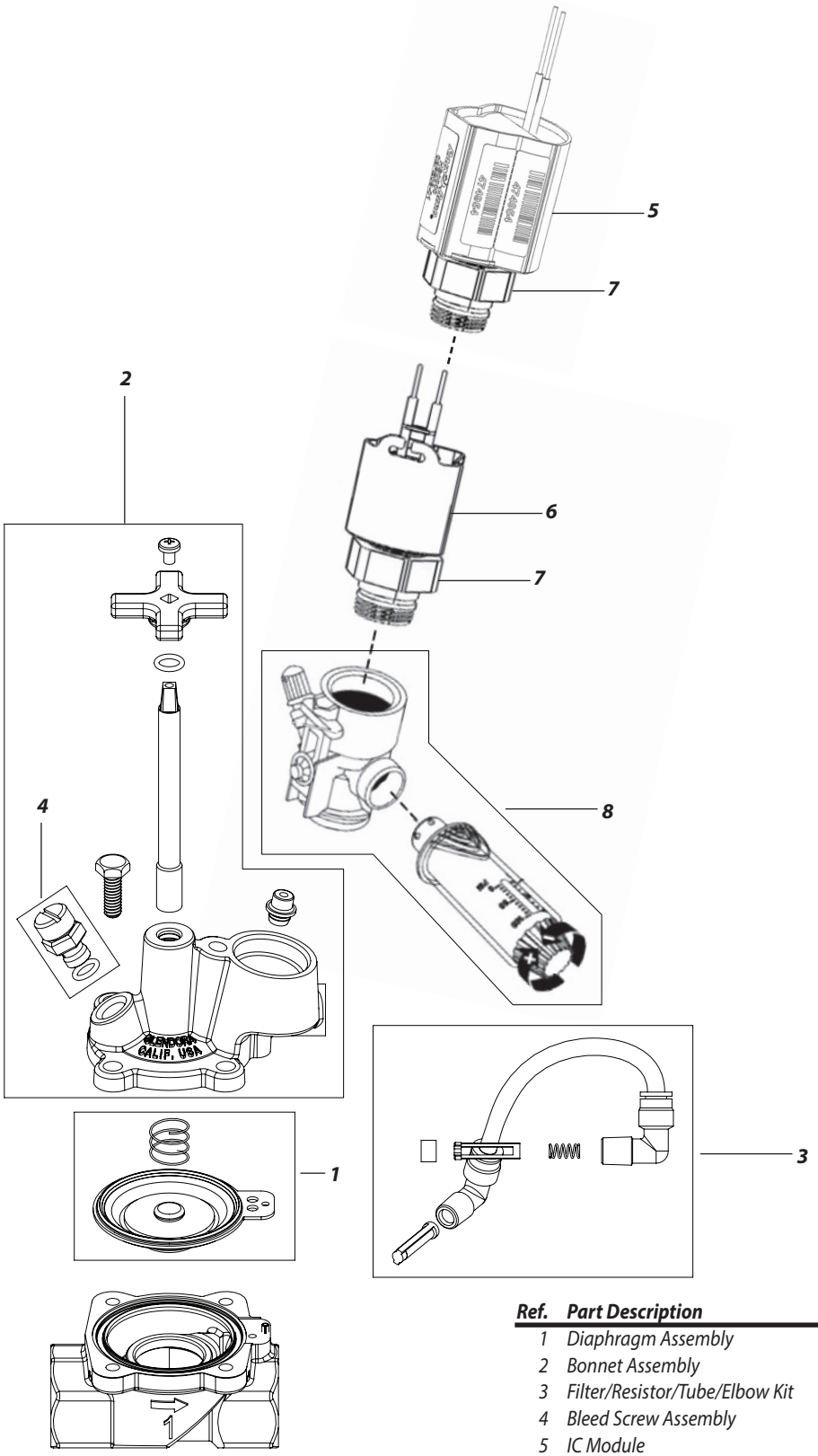

Ref.	Part Description	GSV211	GSVIC211
1	Diaphragm Assembly	202615	202615
2	Bonnet Assembly	20981404	20981404
3	Filter/Resistor/Tube/Elbow Kit	208554	208554
4	Bleed Screw Assembly	202669	202669
5	IC Module	214010	214010
6	Solenoid (GBS25)	213462C	213462C
7	ICMA	214011	—
8	PRS-Dial	B33135	B33135

Note: Part numbers enclosed in brackets ( ) are not available individually, but may be sold in assemblies or kits.

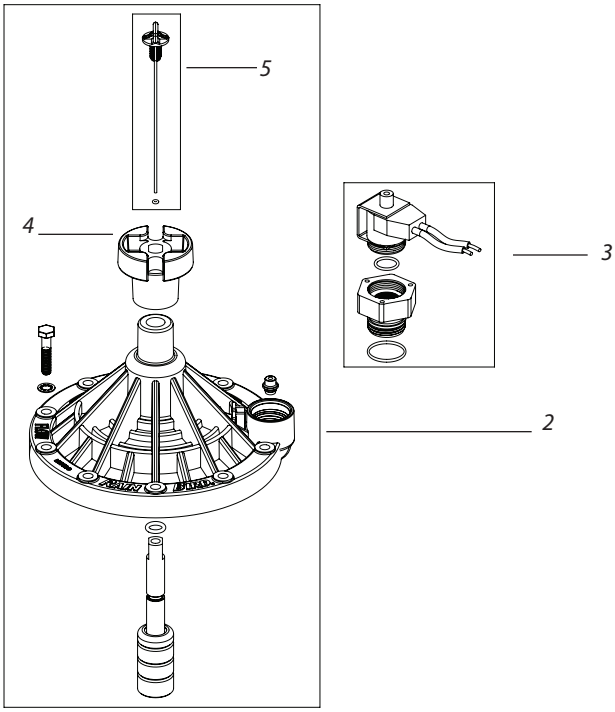

Ref.	Part Description	300BPE	300BPES
1	Diaphragm Assembly	(231543)	231542
2	Bonnet Assembly	231548	231548
3	BPES Solenoid Assembly	236595	236595
4	NP Handle	240134	240134
5	Bleed Screw Assembly	204152	204152

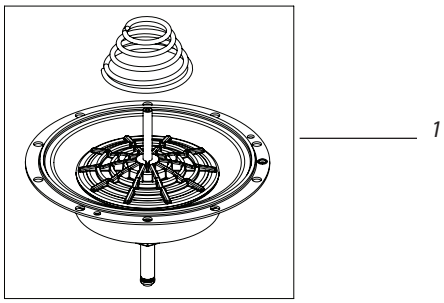

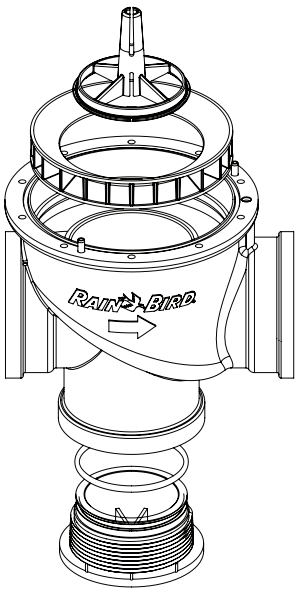

Note: Part numbers enclosed in brackets ( ) are not available individually, but may be sold in assemblies or kits.

TO BUY GENUINE RAIN BIRD PARTS, CONTACT YOUR LOCAL DISTRIBUTOR OR VISIT OUR ONLINE STORE AT WWW.RAINBIRD.COM

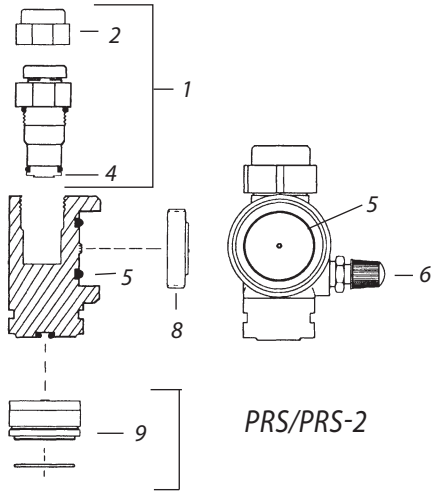

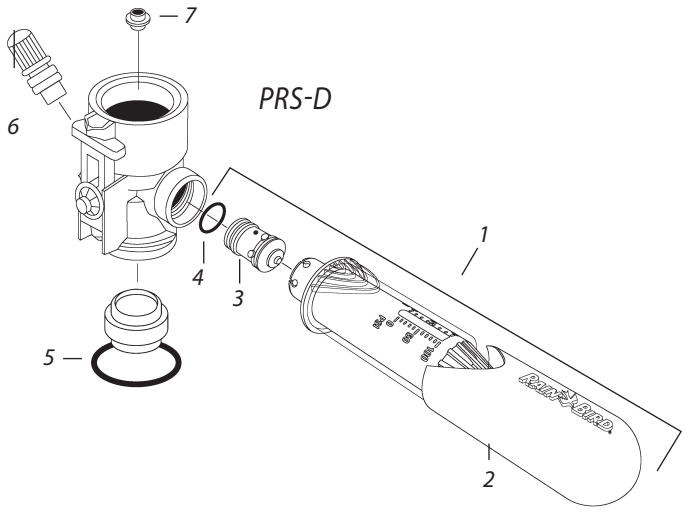

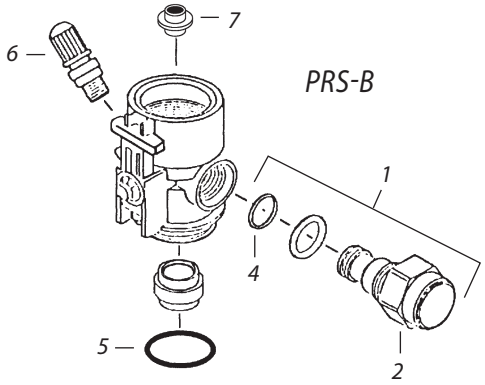

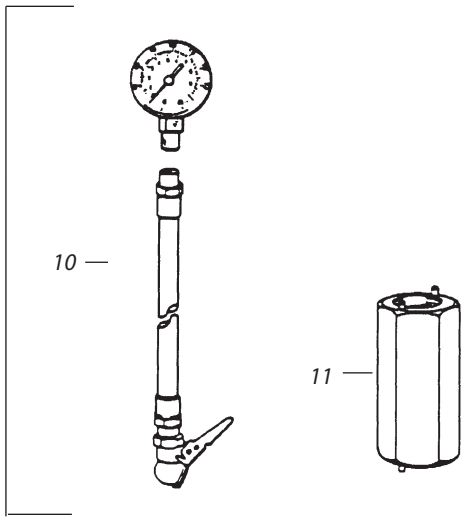

Ref.	Part Description	PRS	PRS-2	PRS-B	PRS-D
CARTRIDGE					
1	Cartridge assembly	—	—	—	—
2	Cap	—	—	—	—
3	Seat assembly	—	—	—	—
4	O-ring, seat	(203026)	(203026)	(203026)	(203026)
HOUSING					
5	O-ring, housing	—	—	(209502)	(209502)
6	Schrader valve	—	—	—	—
7	Solenoid seal	—	—	(208629)	(208629)
8	Nut, plastic	(602606)	—	—	—
9	Fluid resistor (1")	(207399)	—	—	—
–	Fluid resistor (1¼")	(207400)	—	—	—
–	Fluid resistor (1½" and 2")	207401	—	—	—
TOOLS					
10	Pressure hose gauge (PHG)	—	—	—	—
11	Solenoid wrench	B33003	B33003	—	—

Note: Part numbers enclosed in brackets ( ) are not available individually, but may be sold in assemblies or kits.

CONTROLLER ASSEMBLY WITH PEDESTAL (PAR+ES)

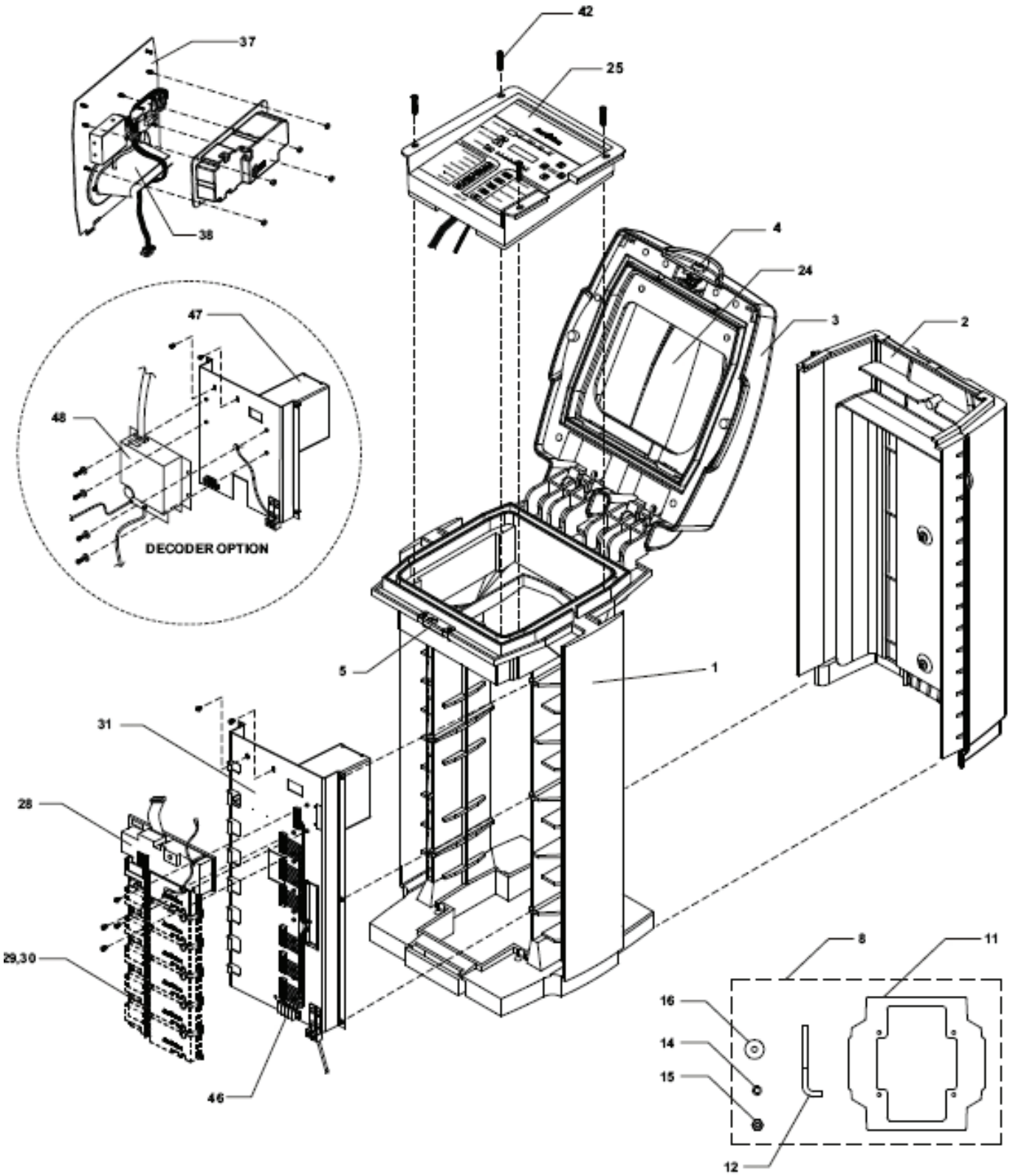

Note: Part numbers enclosed in brackets ( ) are not available individually, but may be sold in assemblies or kits.

TO BUY GENUINE RAIN BIRD PARTS, CONTACT YOUR LOCAL DISTRIBUTOR OR VISIT OUR ONLINE STORE AT WWW.RAINBIRD.COM

CONTROLLER ASSEMBLY WITH PEDESTAL (PAR+ES)

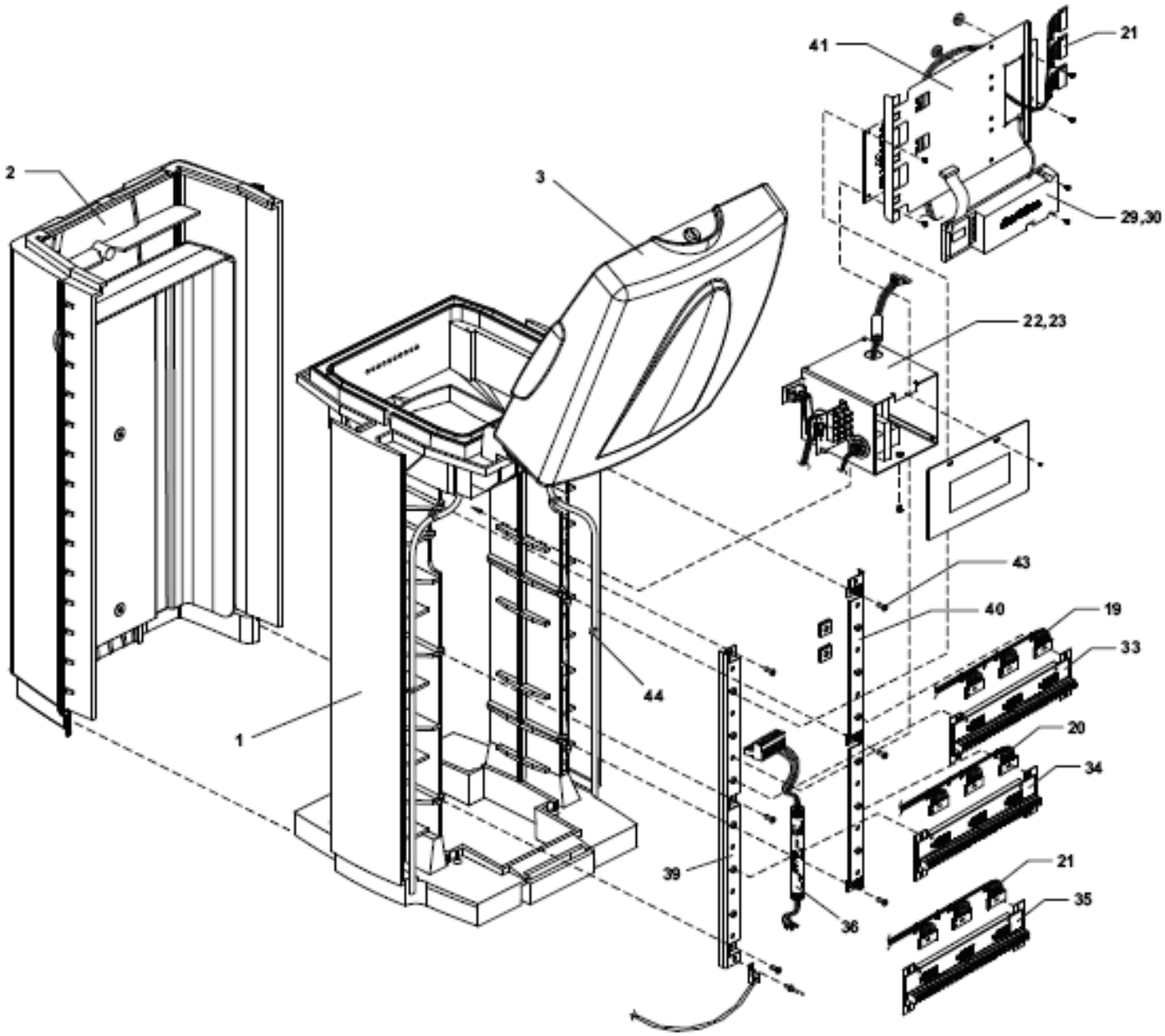

Note: Part numbers enclosed in brackets ( ) are not available individually, but may be sold in assemblies or kits.

CONTROLLER ASSEMBLY WITH PEDESTAL (PAR+ES)

Ref.	Part Description	Qty.	PAR+ES
1	PLASTIC PEDESTAL SUB-ASSY, RP GRAY	1	H44011
2	Door RP Sub-Assy RP	2	(63671902)
3	LID RP Sub-Assy	1	(63671802)
4	Lock, Notched Cam	1	(636709S)
5	Plate, Lock, SST	1	(636743)
6	Bracket, Hinge, SST. Left	1	(63547001)
7	Bracket, Hinge, SST. Right	1	(63547002)
8	PEDESTAL MOUNTING KIT	1	(635780)
9	Bag, Poly 6 X 8	1	(601846)
10	Bag, Poly 15 X 24	1	(63230801)
11	Mounting Template	1	(635233)
12	Anchor Bolt	4	(63525802)
13	Label, Bolt. PPED, Template	1	(635824)
14	Washer 5/16 Lock-Spring	4	(65002907)
15	Nut, Hex 5/16	8	(65003307)
16	Washer Flat 5/16 Type B	4	(652181)
17	MANUAL, INSTALLATION PAR+ES	1	(635778)
18	MANUAL, OPERATION PAR+ES	1	(635777)
19	HARNESS ASSY TERMINAL BOARD STA 1-24	1	(H60331)
20	HARNESS ASSY TERMINAL BOARD STA 25-48	1	(H60341)
21	HARNESS ASSY TERMINAL BOARD STA 49-72	1	(H60351)
22	POWER SUPPLY SUBASSY, PAR+/MSC+	1	63522401
23	POWER SUPPLY SUBASSY, PAR+/MSC+ LINK	1	(63522402)
24	Label, Instruction PART+ES	1	635704S
25	CONTROL MODULE ASSY, PAR+	1	63571102
26	IFX Two-wire Board*		H44510
27	IFX Link (Radio) Board**		H44560
28	INTERCONNECT/PWR SUP SUB-ASSY	1	63322603
29	ASSY, OSM PAR/MSC+	2 - 9	(HA0100)
30	ASSY, OSM PAR/MSC+ /W SW	2 - 9	HA0200
31	Plate, OSM Sub-Assy (A)	1	(63522502)
32	Bezel Plastic Sub-Assy	1	(635229)
33	BRACKET-BOARD ASSY, STA 1-24	1	H60311
34	BRACKET-BOARD ASSY, STA 25-48	1	H60321
35	BRACKET-BOARD ASSY, STA 49-72	1	(H60361)
36	TWO-WIRE PIPE SUB-ASSY	1	(D02110)
37	ANTENNA PANEL ASSY	1	(H41006)
38	ANTENNA 450-470MHz	1	H60140
39	Rail Mounting Left Steel (A)	1	(635540S)
40	Rail Mounting Right Steel (A)	1	(635541S)
41	PAR+ES UPGRADE KIT	1	HP5050
42	Screw #10-16PN HD	4	(65218820)
43	Screw, Phillips PNH	14	(65218848)
44	Twist Lock	2	(651567)
45	Tubing, Rubber 5/8"	2	(63664701)
46	Terminal Block Two-Wire (A)	1	(651501S)
47	DIB BRACKET ASSY	1	(635867)
48	DECODER INTERFACE BOARD (DIB)	1	636104S

* Compatible with all MSC+, PAR+ and PAR+ES Satellites.
** Compatible with all PAR+ES Link Satellites
(A) Product is available through the Production & Service Center (gsplabrequests@rainbird.com).

Note: Part numbers enclosed in brackets ( ) are not available individually, but may be sold in assemblies or kits.

TO BUY GENUINE RAIN BIRD PARTS, CONTACT YOUR LOCAL DISTRIBUTOR OR VISIT OUR ONLINE STORE AT WWW.RAINBIRD.COM

CONTROLLER ASSEMBLY WITH PEDESTAL (PAR+ES)

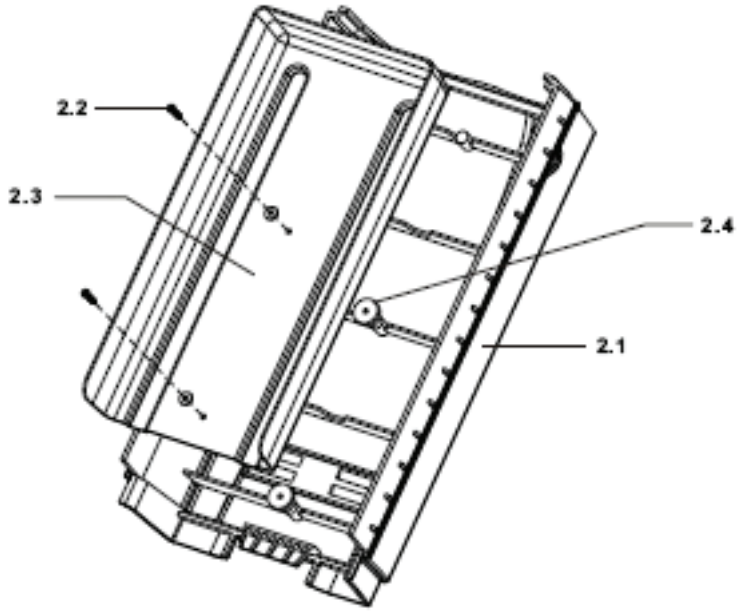

Ref.	Part Description	Qty.	PAR+ES
2	DOOR RP SUB-ASSY RP		(636719)
2.1	Door, Plastic Pedestal	1	(63671902)
2.2	Screw	2	(652281010)
2.3	Inner Door Shield		(636939010)
2.4	Inner Door Spacer		(636940010)

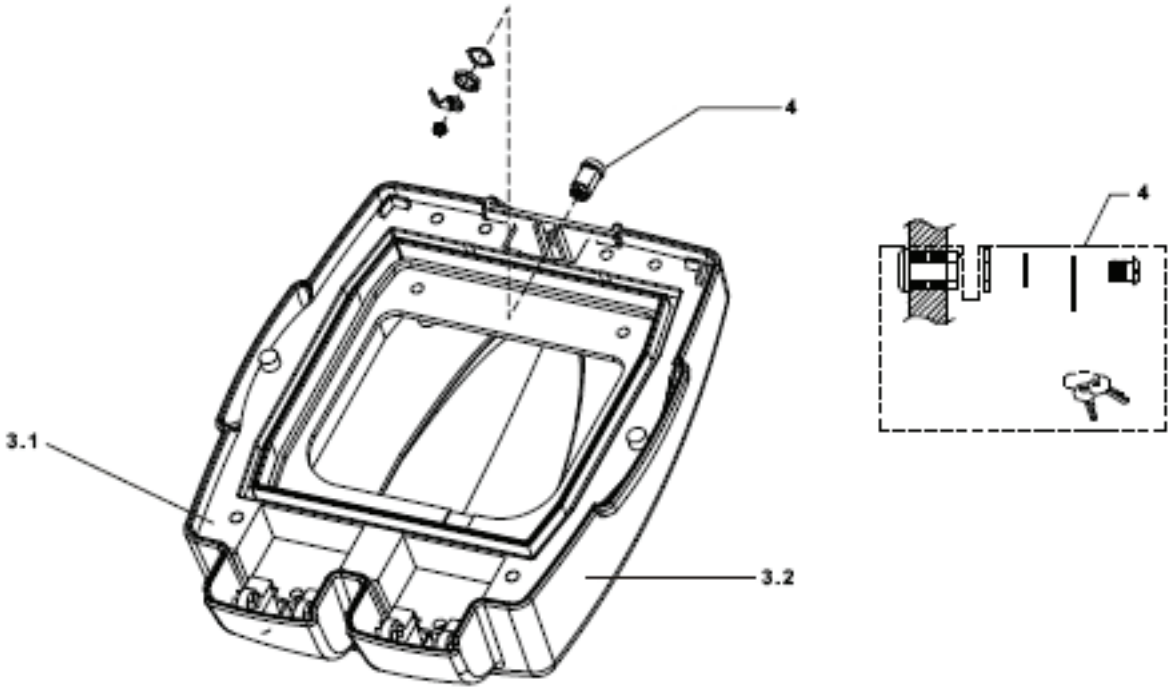

Ref.	Part Description	Qty.	PAR+ES
3	LID RP SUB-ASSY		
3.1	Lid, Inner, Plastic Pedestal	1	(63671702)
3.2	Lid, Outer, Plastic Pedestal	1	(63671802)
4	Lock, Notched Cam	1	(636709S)

Note: Part numbers enclosed in brackets ( ) are not available individually, but may be sold in assemblies or kits.

CONTROLLER ASSEMBLY WITH PEDESTAL (PAR+ES)

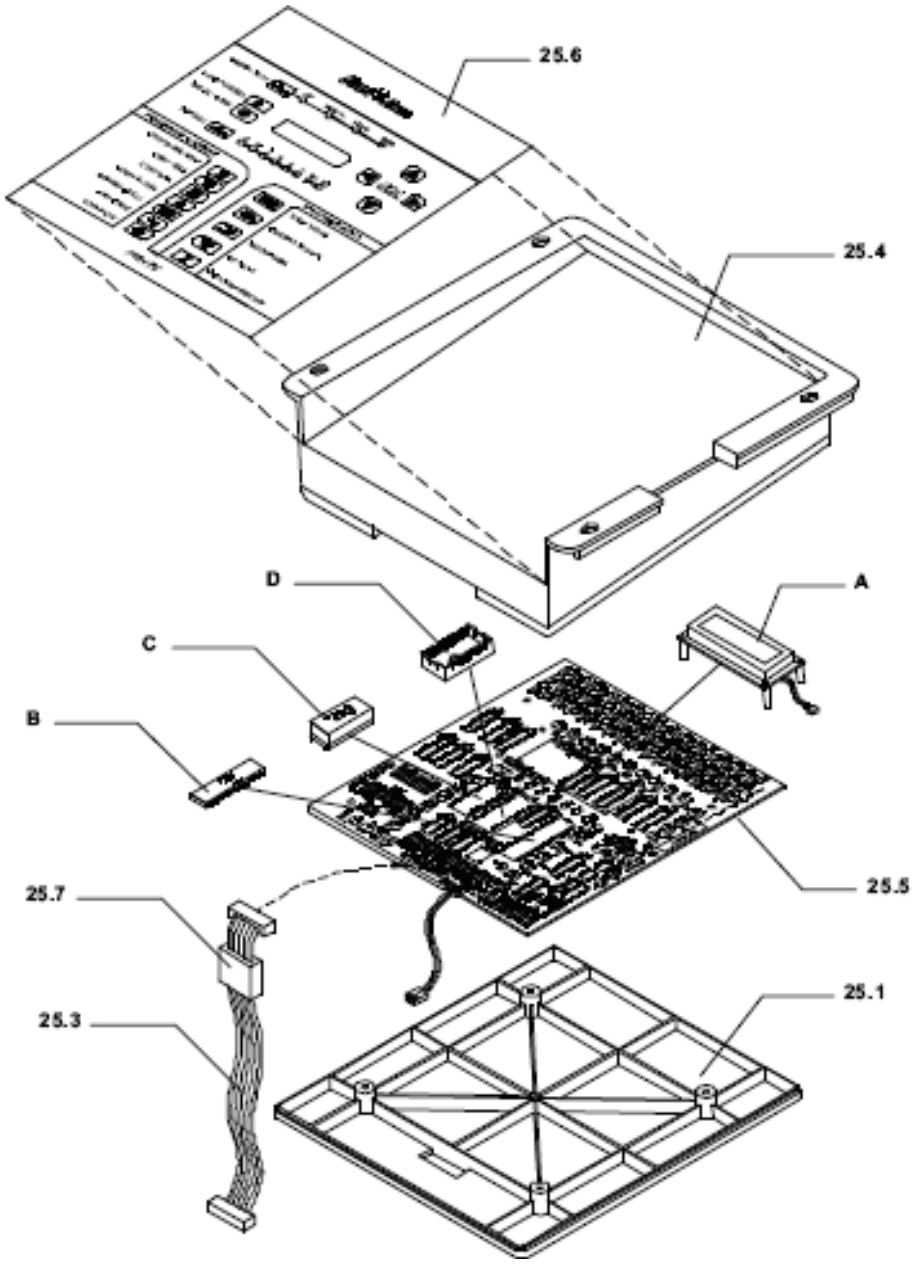

Ref.		Part Description	Qty.	PAR+ES
25 CONTROL MODULE ASSY, PAR+ES				63571101
25.1		Assy, Cont. Mod cover PAR+/MSC+	1	(63488803)
25.2		Screw 7-19X1/2 Hilo RC-7	4	(622922)
25.3		Harness Assy, Cable-PAR/MSC+	1	633176
25.4		Panel, Front-PAR/MSC+	1	(633201)
25.5		PAR+ES PWB Assy Main Logic Board	1	63495505
	A	LCD Backlight Assy PAR+/PAR+ES	1	635308
	B	IC, Microcontroller, 80C32	1	(651031)
	C	IC, Clock and 64K Ram, DS1243Y	1	650718
	D	Soket IC Carrier 2 28PIN	1	(65062210)
25.6		Overlay, Membrane Switch, PAR+ES	1	635706
25.7		Ferrite, Flat Cable Snap-It	1	(651612)

Note: Part numbers enclosed in brackets ( ) are not available individually, but may be sold in assemblies or kits.

TO BUY GENUINE RAIN BIRD PARTS, CONTACT YOUR LOCAL DISTRIBUTOR OR VISIT OUR ONLINE STORE AT WWW.RAINBIRD.COM

CONTROLLER ASSEMBLY WITH PEDESTAL (PAR+ES)

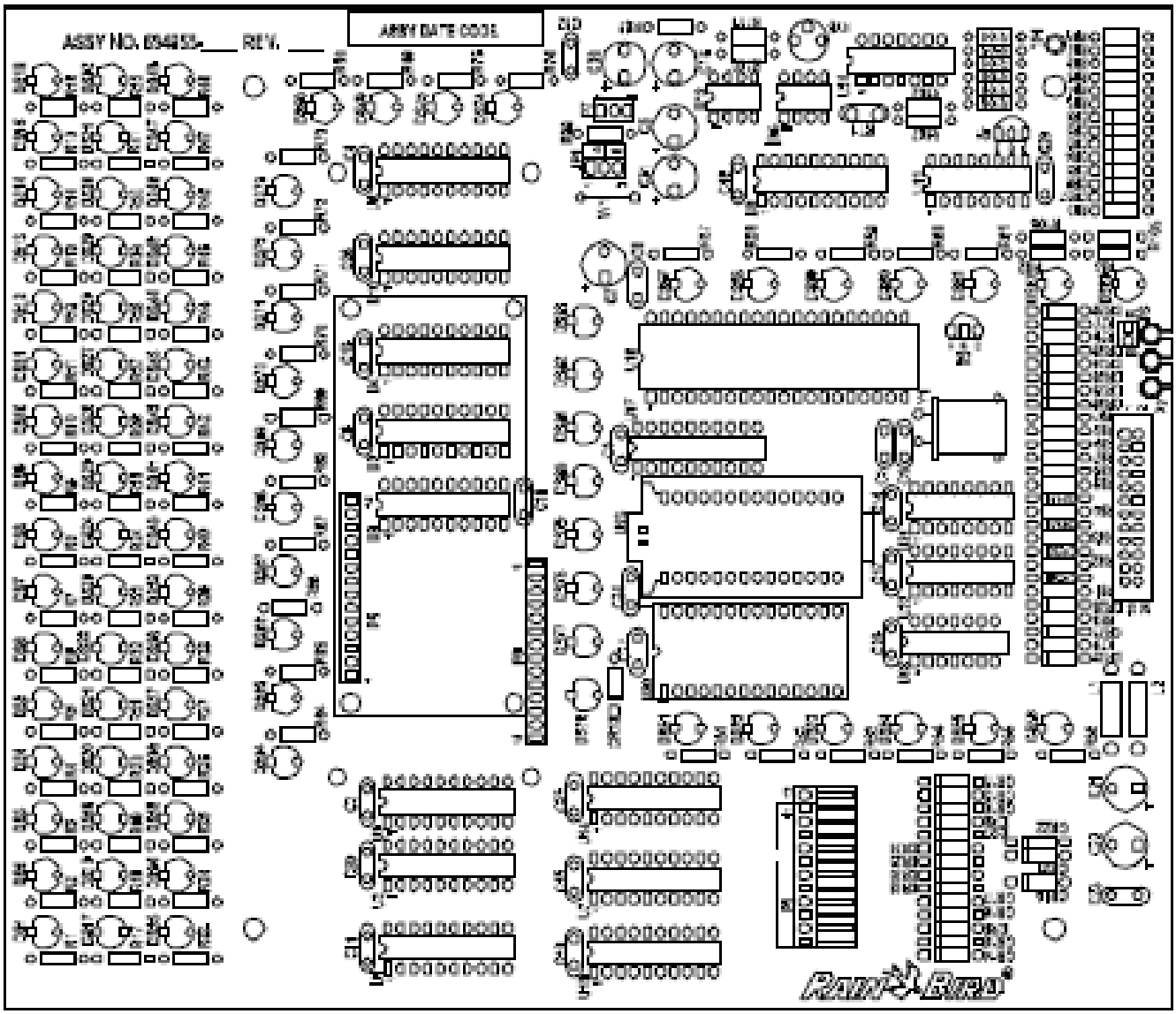

Note: Part numbers enclosed in brackets ( ) are not available individually, but may be sold in assemblies or kits.

CONTROLLER ASSEMBLY WITH PEDESTAL (PAR+ES)

Ref.	Part Description	Qty.	PAR+ES
25.5	MAIN LOGIC PWB ASSEMBLY PAR+ES		63495505
P3	Harness Assy Plug F/P Light	1	(635152)
(P5)	LCD Backlight Assy, PAR+	1	635308
U23	S/W M/Assy, M/L BRD V10	1	(635708)
C1, C2	Capacitor CER Disc, 50V (MIN)1PFTO8200	2	(65001215)
C25-29, 12, 29, 23, 24	Capacitor CER 0.1MF 50V	14	65001345
CR7-13	Diode IN4148	7	65003701
CR14-38, CR1-6	Diode Zener 1N5231B 5.1V	31	(65003870)
R92	Resistor 1/4W 10% 4.7 OHM	1	(65007917)
R108	Resistor 1/4W 10% 100 OHM	1	(65007949)
R109	Resistor 1/4W 10% 220 OHM	1	(65007957)
R93-98, R78-84, R86-91	Resistor 1/4W 10% 330 OHM	19	(65007961)
R64-75	Resistor 1/4W 10% 560 OHM	12	(65007967)
R77, R85	Resistor 1/4W 10% 2.7 K	2	(65007983)
R99	Resistor 1/4W 10% 4.7 K	1	(65007989)
R105	Resistor 1/4W 10% 5.6 K	1	(65007991)
R100-104	Resistor 1/4W 10% 10 K	5	(65007997)
R106	Resistor 1/4W 10% 22 K	1	65008006
R107	Resistor 1/4W 10% 39 K	1	(65008012)
R110, 111	Resistor 1/4W 10% 100 K	2	(65008022)
Q2	Transistor, NPN 600MW PN2222	1	(650084)
L1, L2	Inductor Ferrite	2	(65030005)
TP1	Terminal Test PT .067-078	1	(65033601)
U24	IC, Quad OP AMP LM324	1	(650358)
Q1	Transistor PNP 625 MW	1	(650369)
P7	Header, 3 Position 1"	1	(65045403)
(U23)	Socket IC Carrier 28PI	1	(65051802)
P1	Header, .100CTRS, 11CKT, FL RTANG	1	(65053001)
C7, C22	Capacitor 2.2UFD 25V Tantalum	2	(65058303)
C6, 13, 30, 31	Capacitor 22UFD 25V Tantalum	4	(65058309)
C21	Capacitor 47.0 UF, 25V, Tantalum	1	(65058311)
U19	IC Micropower Monitor & WDT	1	(650585)
U9, 10, 14, 15, 17	IC, 3 State OCT Latch 74HC373	5	(650611)
U18	IC, Nand 2-IN Quad 74HCOO	1	(650612)
U21, 22	IC, Decoder 1-of-8 74HC238	2	(650613)
U20	Socket, DIP, 28POS, Ultra Low Profile	1	(65062210)
W1, (Y1)	Wire, A.I.	4	(65062503)
U11	IC. Decoder 3 to 8 Line DIP16 74HC138	1	(650699)
U20	IC. Clock and 64K Ram DS1243Y	1	650718
Y1	Crystal, 11.0592 MHZ	1	(650721)
R76	POT, 100K OHM 1/4" Single Turn	1	(65073914)
P2	Header, Low Profile 24 POS.	1	(65087224)
DS76, -83, 65, 67, 69, 71	LED, Clear Red Super Bright	12	(650910)
P5, P6	Socket, ELEV Term Strip, 14 CKTS	1	(65102914)
U16	IC, Microcontroller, 80C32	1	(651031)
RT1	Thermistor, 5%, 6.8K, 3980	1	(65114906)
U2	IC, Converter DC/DC Volt (LT 1026)	1	(651455)

Note: Part numbers enclosed in brackets ( ) are not available individually, but may be sold in assemblies or kits.

TO BUY GENUINE RAIN BIRD PARTS, CONTACT YOUR LOCAL DISTRIBUTOR OR VISIT OUR ONLINE STORE AT WWW.RAINBIRD.COM

CONTROLLER ASSEMBLY WITH PEDESTAL (PAR+ES)

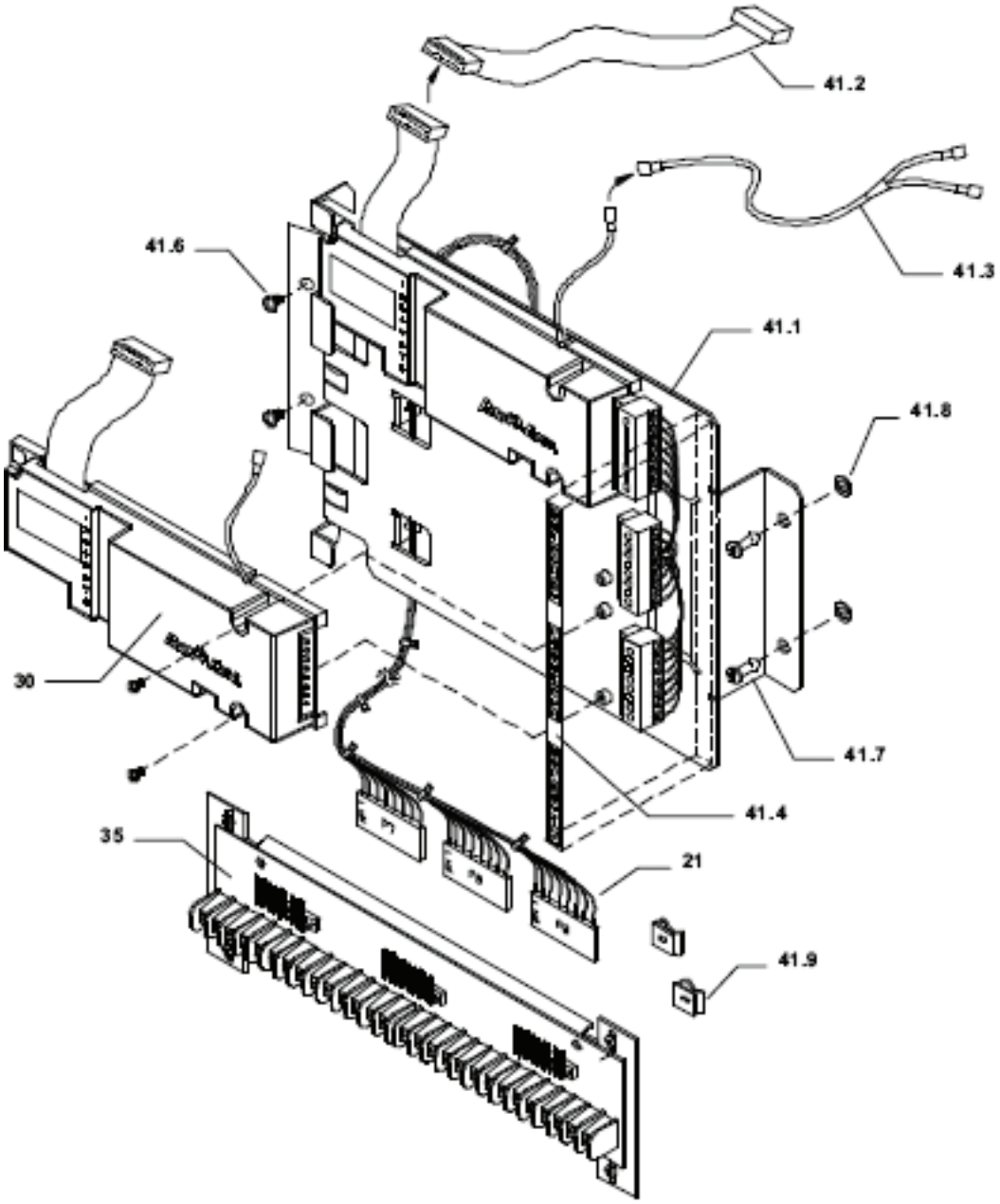

Ref.	Part Description	Qty.	PAR+ES
41	PAR+ES UPGRADE KIT		HP5050
41.1	Bracket, Mounting Steel, 72 STA (A)	1	(635542)
41.2	Cable Harness Assy	1	635569
41.3	Cable Assembly, Y	1	(635599)
41.4	Label, ST I.D., 72 STA	1	(635638)
41.5	Cable Tie, Nylon 7/8 Bundle	2	(650131)
41.6	Screw, Pan HD, #10 X 1/4"	2	(65075457)
41.7	Stud Phillips, Oval Steel	2	(651511)
41.8	Retainer, Black Nylon	2	(651512)
41.9	Receptacle, 1/4 Turn Steel	2	(651597)
21	HARNESS ASSY TERMINAL BRD STA 49-72	1	H60351
35	BRACKET-BOARD ASSY STA 49-72	1	(H60361)

(A) Product is available through the Production & Service Center (gsplabrequests@rainbird.com).

Note: Part numbers enclosed in brackets ( ) are not available individually, but may be sold in assemblies or kits.

CONTROLLER ASSEMBLY WITH PEDESTAL (PAR+ES)

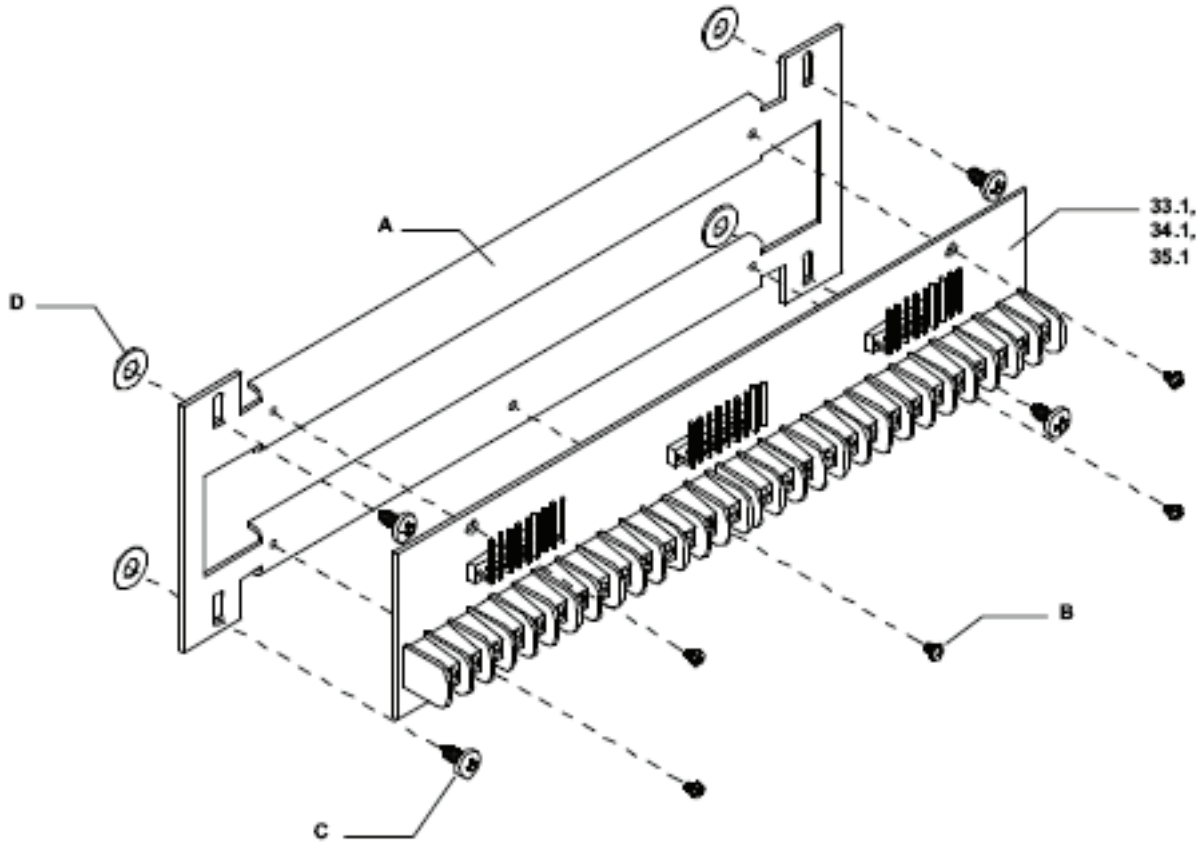

Ref.		Part Description	Qty.	PAR+ES
33		TERMINAL BOARD ASSEMBLY STA 1-24		H60311
	33.1	PWB Assy PAR+ Term BRD 1-24 (A)	1	(635121)
	A	Plate, Terminal Strip, STE	1	(635217)
	B	Screw 6-32 X 3/8	5	(65010528)
	C	Screw, Captive Panel PAN	4	(65151706)
	D	Washer, Panel Screw Retainer	4	(65151806)
34		TERMINAL BOARD ASSEMBLY STA 25-48		H60321
	34.1	PWB Assy PAR+ Term BRD 25-48 (A)	1	(635124)
	A	Plate, Terminal Strip, STE	1	(635217)
	B	Screw 6-32 X 3/8	5	(65010528)
	C	Screw, Captive Panel PAN	4	(65151706)
	D	Washer, Panel Screw Retainer	4	(65151806)
35		TERMINAL BOARD ASSEMBLY STA 49-72		(H60361)
	35.1	PWB Assy PAR+ Term Brd 49-72 (A)	1	(635560)
	A	Plate, Terminal Strip, STE	1	(635217)
	B	Screw 6-32 X 3/8	5	(65010528)
	C	Screw, Captive Panel PAN	4	(65151706)
	D	Washer, Panel Screw Retainer	4	(65151806)

(A) Product is available through the Production & Service Center (gsplabrequests@rainbird.com).

Note: Part numbers enclosed in brackets ( ) are not available individually, but may be sold in assemblies or kits.

TO BUY GENUINE RAIN BIRD PARTS, CONTACT YOUR LOCAL DISTRIBUTOR OR VISIT OUR ONLINE STORE AT WWW.RAINBIRD.COM

CONTROLLER ASSEMBLY WITH PEDESTAL (PAR+ES)

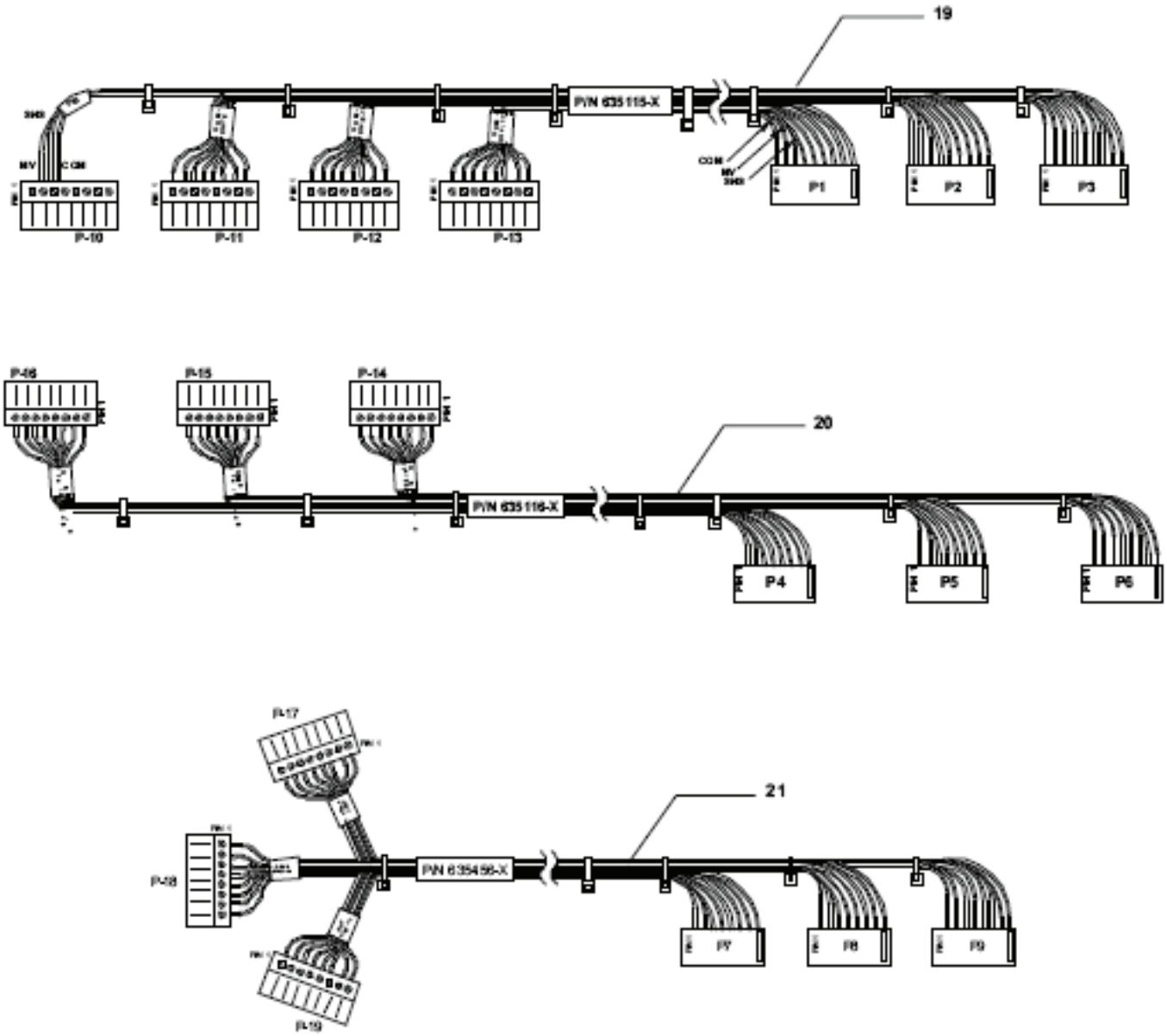

Ref.	Part Description	Qty.	PAR+ES
19	HARNESS ASSY TERMINAL BOARD STA 1-24	1	(H60331)
20	HARNESS ASSY TERMINAL BOARD STA 25-48	1	(H60341)
21	HARNESS ASSY TERMINAL BOARD STA 49-72	1	(H60351)

Note: Part numbers enclosed in brackets ( ) are not available individually, but may be sold in assemblies or kits.

CONTROLLER ASSEMBLY WITH PEDESTAL (PAR+ES)

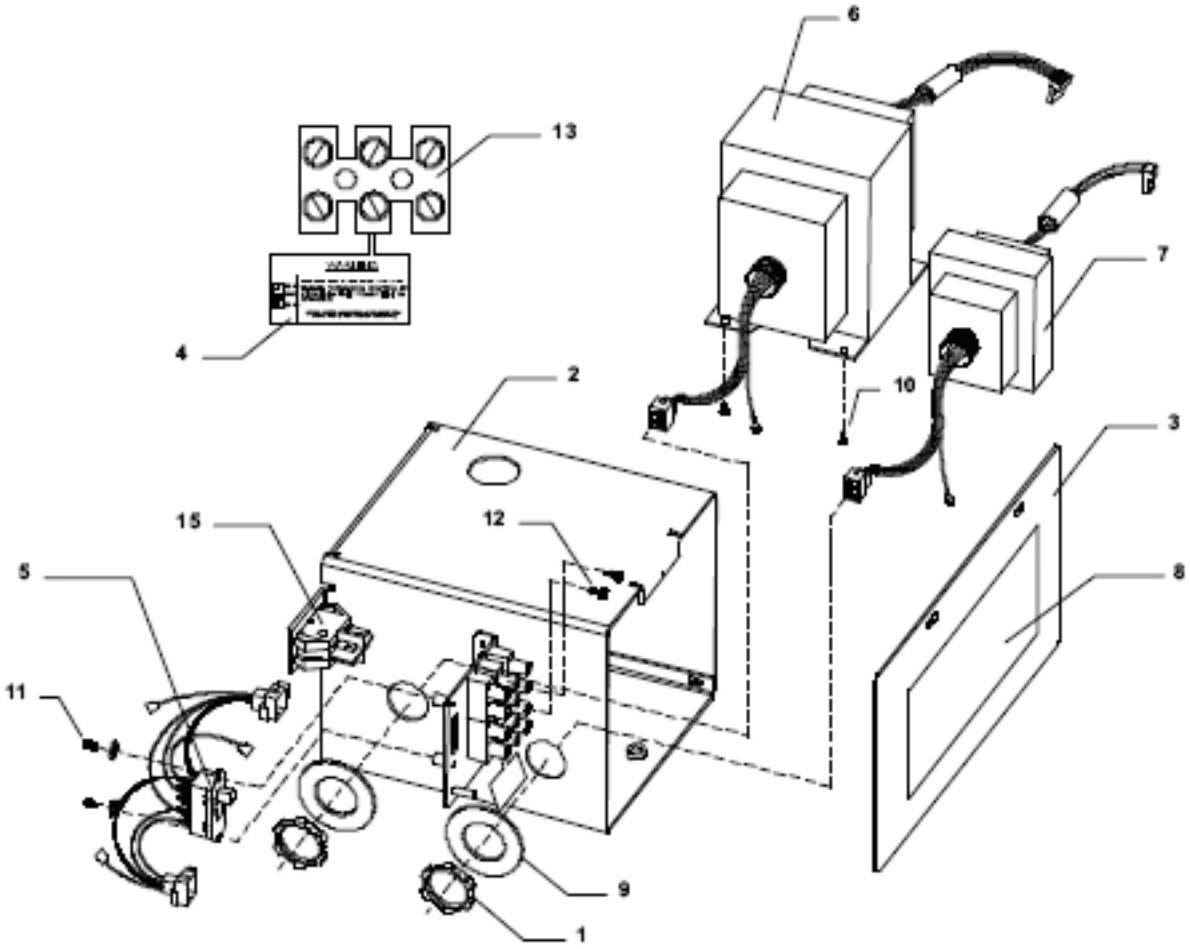

Ref.		Part Description	Qty.	PAR+ES	PAR+ES (LINK)
22		POWER SUPPLY PAR+/MSC+		63522401	
23		POWER SUPPLY PAR+/MSC+ LINK			(63522402)
	1	Locknut Conduit	1(2)	(628013)	(628013)
	2	Box, XFMR, Steel	1	(635113)	(635113S)
	3	Cover, XFRM Steel	1	(635114)	(635114S)
	4	Label, PWR Supp.	1	(635154)	(635154)
	5	Switch, Voltage Selector	1	(633204)	(635204S)
	6	TRANSFORMER CONNECTOR ASSY	1	633252	633252
	7	TRANSFORMER CONNECTOR ASSY LINK	0(1)	633254	
	8	Label, Cover Steel XFMR	1	(635226)	(635226S)
	9	Washer, Flat 7/8" .090	1(2)	(65002343)	(65002343)
	10	Screw, SCFTPG, PNH, #8-18.375L	4	(65010441)	(65010441)
	11	Screw 4-40 3/8L PN HD	2	(65010515)	(65010515)
	12	Screw 8-32	2	(65010548)	(65010548)
	13	Terminal Block Double Row	1	(65149503)	(65149503)
	14	Terminal Block Double Row Male	1	(65149603)	(65149603)
	15	Switch, DPST, Rocker With (A)	1	(651503)	(651503)

(A) Product is available through the Production & Service Center (gsplabrequests@rainbird.com).

Note: Part numbers enclosed in brackets ( ) are not available individually, but may be sold in assemblies or kits.

TO BUY GENUINE RAIN BIRD PARTS, CONTACT YOUR LOCAL DISTRIBUTOR OR VISIT OUR ONLINE STORE AT WWW.RAINBIRD.COM

CONTROLLER ASSEMBLY WITH PEDESTAL (PAR+ES)

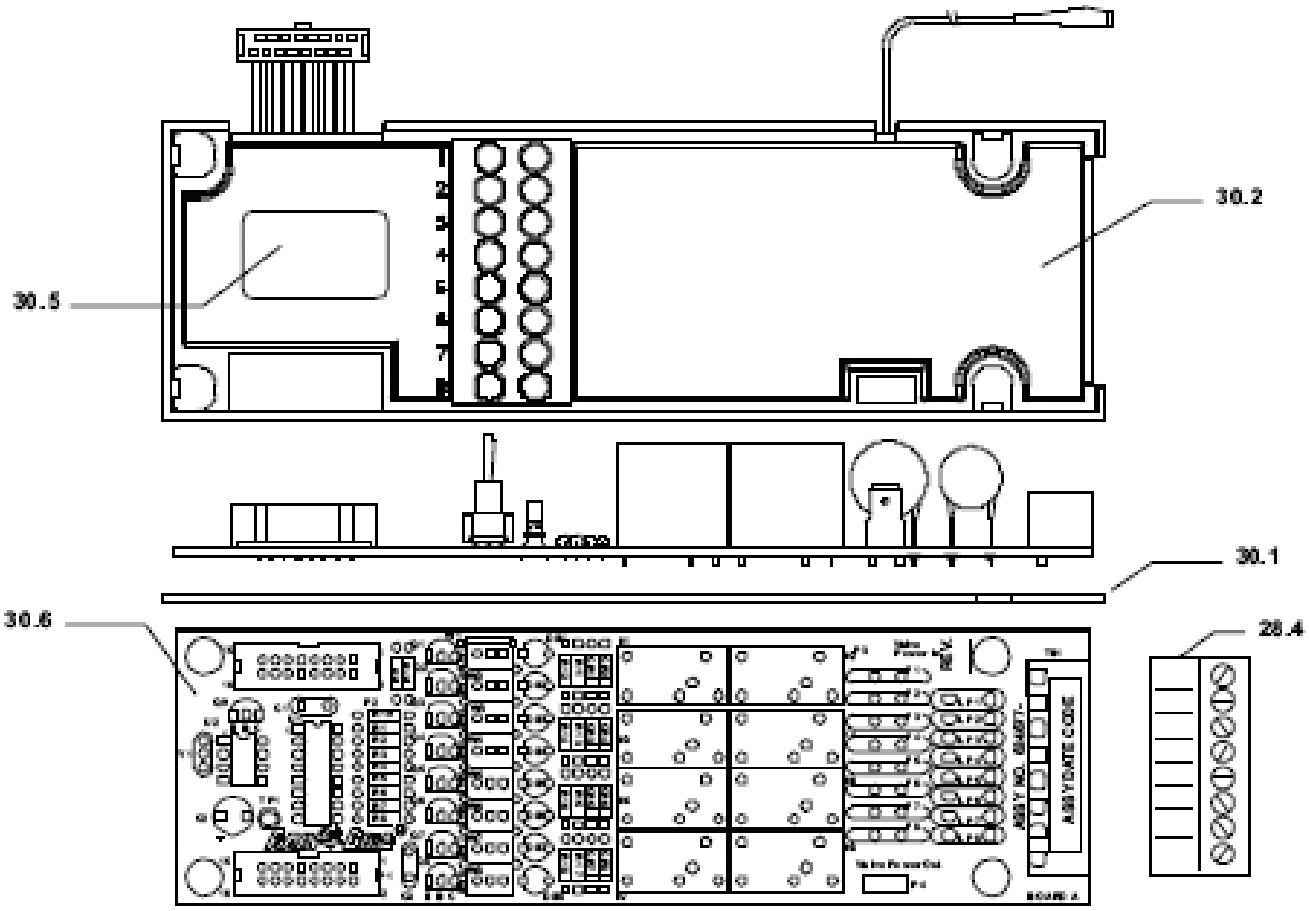

Note: Part numbers enclosed in brackets ( ) are not available individually, but may be sold in assemblies or kits.

CONTROLLER ASSEMBLY WITH PEDESTAL (PAR+ES)

Ref.		Part Description		Qty.	PAR+ES
30		OUTPUT STATION MODULE /W SW			HA0200
	30.1		Shield, Insul., U.L.94V0, OSM PWB	1	633852
	30.2		Cover, Output Station Module	1	(63464402)
	30.3		Screw, MACH PNH #6-32	2	(65048012)
	30.4		Connector, Terminal Block	1	(65103408)
	30.5		Label, Switch Positon	1	(634680)
	30.6		PWB Assy Output ST MOD (OSM) (A)	1	(63467701)
		P2	Ribbon Cable Assy PAR/MSC+	1	633245
		P3	Cable, Value Power-PAR/MSC+	1	(633247)
		U2	SW Assy, OSM V01	1	634672
		C1, C3	Capacitor Ceramic Disc 0.1MF 50V	2	(65001345)
		CR-1-CR8	Diode IN4148	8	(65003701)
		R11-R18	Resistor 1/4W 10% 2.2K	8	(65007981)
		R19	Resistor 1/4W 10% 3.3K	1	(65007985)
		R1-R8	Resistor 1/4W 10% 4.7K	8	(65007989)
		R10	Resistor 1.4W 10% 5.6K	1	(65007991)
		R9	Resistor 1/4W 10% 22K	1	65008006
		Q1-Q8	Transistor, NPN 600MW PN2222	8	(650084)
		P4	Terminal Q.Disk Male	1	(650138)
		TP1	Terminal Test PT .067-078	1	(65033601)
		Q9	Transistor PNP 625 MW	1	(650369)
		C2	Capacitor Tantalum 22UFD 25V	1	(65058309)
		SW1-SW8	Sub-Miniature Toggle SWI	8	(651414)
		K1-K8	Relay, SPDT, Small 5A 9V	8	(65072503)
		P1	Header .100 CTR 16 CKT	1	(65087216)
		U1	IC 8 BIT Latch ADDR 74HC259 8 BIT	1	(650889)
		TB1	Socket, Horizontal 8 CRKT	1	(65090008)
		DS1-DS8	LED, Clear Red Super Bright	8	(650910)
		F1-F8	Fuse, Self Resetting, 1.85AMPS	8	(65112405)
		Y1	Resonator, Ceramic 10MHZ	1	(651445)
		LP1-LP8	MOV, 47 V, 1000A	8	(651467)

(A) Product is available through the Production & Service Center (gsplabrequests@rainbird.com).

Note: Part numbers enclosed in brackets ( ) are not available individually, but may be sold in assemblies or kits.

TO BUY GENUINE RAIN BIRD PARTS, CONTACT YOUR LOCAL DISTRIBUTOR OR VISIT OUR ONLINE STORE AT WWW.RAINBIRD.COM

CONTROLLER ASSEMBLY WITH PEDESTAL (PAR+ES)

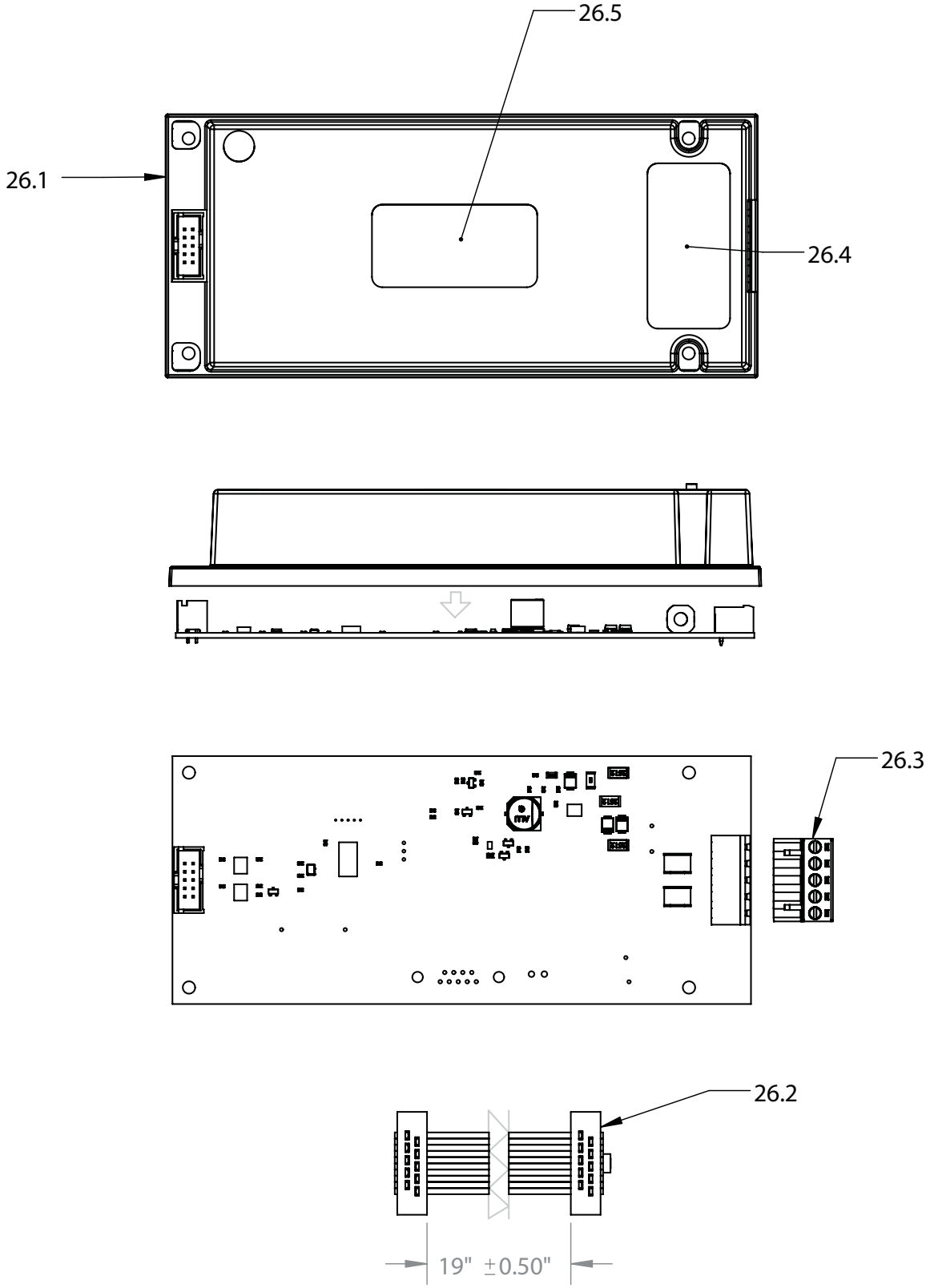

Note: Part numbers enclosed in brackets ( ) are not available individually, but may be sold in assemblies or kits.

CONTROLLER ASSEMBLY WITH PEDESTAL (PAR+ES)

Ref.	Part Description	Qty.	PAR+ES
26	IFX Two-Wire Board*		H44510
26.1	Cover, Interface TWB	1	(633207)
26.2	Cable, Harness Assy	1	634875
26.3	Connector, Terminal Block	1	(65103405)
26.4	Label, IFX 2-wire	1	(633668)
26.5	Label, IFX Connected	4	(639798)
26.6	PCB IFX 2W (A)	1	(639645)
26.7	Screw, #4-40 X 1/4" PH	4	(65048001)

* Compatible with all MSC+, PAR+ and PAR+ES Satellites.

(A) Product is available through the Production & Service Center (gsplabrequests@rainbird.com).

Note: Part numbers enclosed in brackets ( ) are not available individually, but may be sold in assemblies or kits.

TO BUY GENUINE RAIN BIRD PARTS, CONTACT YOUR LOCAL DISTRIBUTOR OR VISIT OUR ONLINE STORE AT WWW.RAINBIRD.COM

CONTROLLER ASSEMBLY WITH PEDESTAL (PAR+ES)

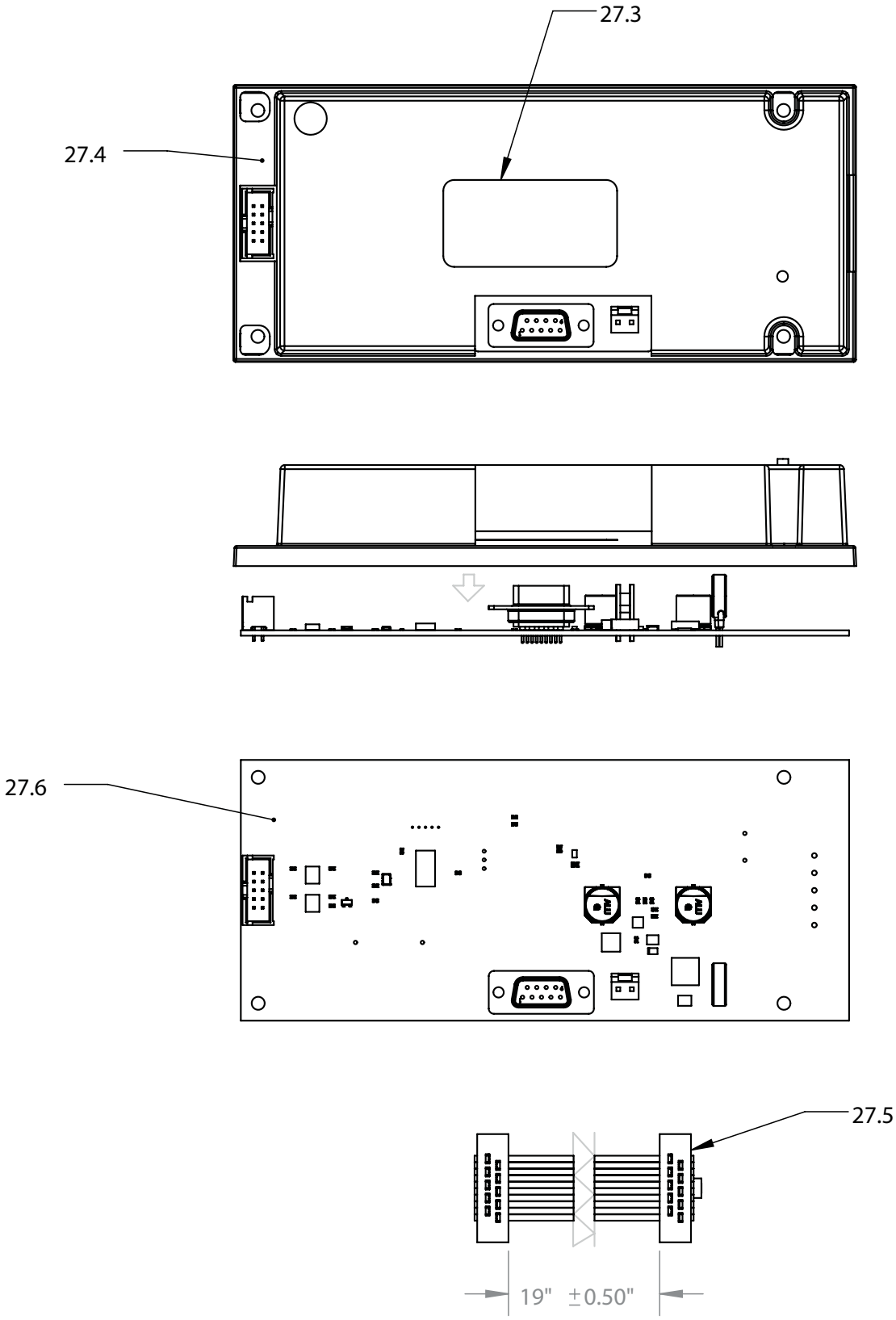

Note: Part numbers enclosed in brackets ( ) are not available individually, but may be sold in assemblies or kits.

CONTROLLER ASSEMBLY WITH PEDESTAL (PAR+ES)

Ref.		Part Description	Qty.	PAR+ES
27		IFX Link (Radio) Board*		H44560
	27.1	Assy, IFX Link Board	1	(634935)
	27.2	Screw, #4-40 X 1.4" PH	4	(65048001)
	27.3	Label, IFX Link	1	(639799)
	27.4	Cover, PCB+ Link	1	(633231)
	27.5	Cable Harness Assy	1	634875
	27.6	PCB IFX Wireless (A)	1	(639648)

* Compatible with all MSC+, PAR+ and PAR+ES Satellites.

(A) Product is available through the Production & Service Center (gsplabrequests@rainbird.com).

Note: Part numbers enclosed in brackets ( ) are not available individually, but may be sold in assemblies or kits.

TO BUY GENUINE RAIN BIRD PARTS, CONTACT YOUR LOCAL DISTRIBUTOR OR VISIT OUR ONLINE STORE AT WWW.RAINBIRD.COM

CONTROLLER ASSEMBLY WITH PEDESTAL (PAR+ES)

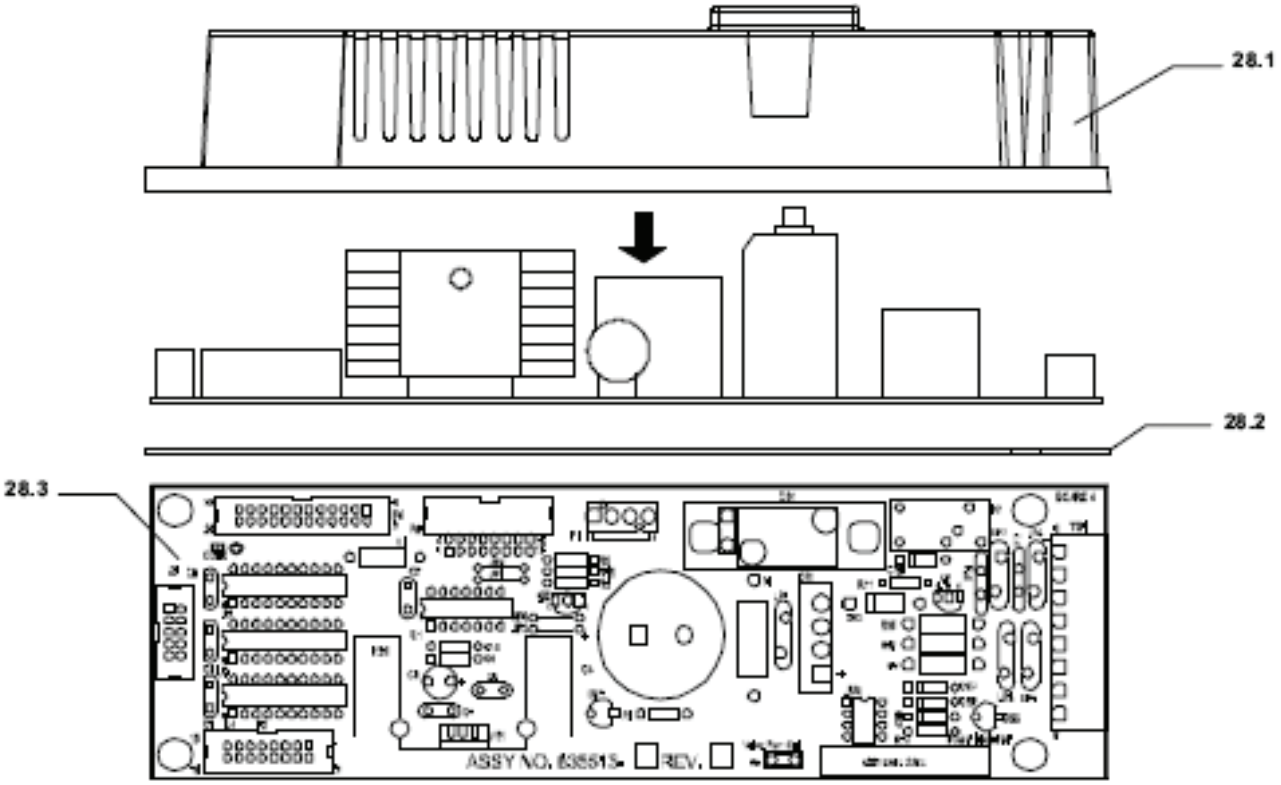

Note: Part numbers enclosed in brackets ( ) are not available individually, but may be sold in assemblies or kits.

CONTROLLER ASSEMBLY WITH PEDESTAL (PAR+ES)

Ref.		Part Description	Qty.	PAR+ES
28		INTERCONNECT/PWR SUP SUB-ASSY PAR+ES		63322603
28.1		Cover, Intcon PWB-PAR/MSC+	1	(633208)
28.2		Shield, Insul, U.L.94-V0, P/I-PWB (A)	1	(633851)
28.3		PWB Power Interface Assy (A)	1	(63551301)
	C1, 2, 5, 7, 8	Capacitor CER 0.1MF 50V	6	(65001345)
	LP1	MOV 33Volts 500AMPS	1	(650015)
	(VR1)	Washer, Flat #5 .010	1	(65002303)
	CR3, 6, 7, 8	Diode IN4148	4	(65003701)
	R1	Resistor 1/4W 10% 560 OHM	1	(65007967)
	R11, 12	Resistor 1/4W 10% 4.7K	2	(65007989)
	R4, 14, 15	Resistor 1/4W 10% 5.6K	4	(65007991)
	Q1	Transistor, NPN 600MW PN2222	1	(650084)
	R3	Resistor, 10K-5%, 1/4W, C Film	1	(65013597)
	P5	Terminal Q.Disk Male	1	(650138)
	(VR1)	Rivet Blind 1/8 X .328	1	(65013905)
	R2, 10, 13	Resistor 1.2W 10% 2K	3	(65020280)
	U2	IC OPTO-Coupler MCT6	1	(650253)
	L1	Inductor Ferrite	1	(65030005)
	Q2	Transistor PNP 625 MW	1	(650369)
	U1	IC, Inverter 74HC14	1	(650540)
	CR1	Bridge Rectifier, 50V 4AMP SIP	1	(65058101)
	C2	Capacitor 22UFD 25V Tantalum	1	(65058309)
	CR2	Transient Suppressor 18V	1	(65059522)
	U4	IC, 3 State OCT Latch, 74HC373	2	(650611)
	J1, 2, 3, 4	Wire, A.I.	4	(65062503)
	K1	Relay, SPDT, Small 5A 9V	1	(65072503)
	VR1	IC LM2940-5.0	1	(650733)
	P3	Header .100CTR, 10CKT, LO Profil	1	(65087210)
	P2	Header .100 CTR 16 CKT	1	(65087216)
	P4	Header, Low Profile 24 POS.	1	(65087224)
	LP2, 3, 4, 5	Mov, 47 Volts 1000 AMPS	4	(650875)
	P1	Header, St. SQ PIN 4 POS.	1	(65089304)
	TB1	Socket, Horizontal 8 CRKT	1	(65090008)
	F1	Fuse, Slow Blow, 250V, 2.50A, 2AG	1	(65090510)
	DSI, DS2	Led, Clear Red Super Bright	2	(650910)
	C4	Capacitor, Low Profile	1	(650950)
	HS1	Heatsink, Platic, High Perform	1	(651019)
	CB1	Circuit Breaker, 6.00 AMPS	1	(65103222)
	P6	Header, Low Profile R Angle	1	(65105005)
	PT1, PT2	Fuse, Self Resetting, 1.85AMPS	2	(65112405)
	U5	IC Buffer 74HC244	1	(651590)

(A) Product is available through the Production & Service Center (gsplabrequests@rainbird.com).

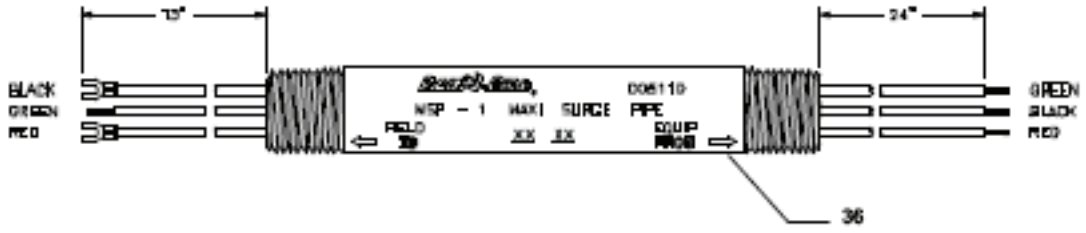

Ref.	Part Description	Qty.	PAR+ES
36	TWO WIRE PIPE SURGE PROTECTOR (MSP-1)		D05110

Note: Part numbers enclosed in brackets ( ) are not available individually, but may be sold in assemblies or kits.

TO BUY GENUINE RAIN BIRD PARTS, CONTACT YOUR LOCAL DISTRIBUTOR OR VISIT OUR ONLINE STORE AT WWW.RAINBIRD.COM

CONTROLLER ASSEMBLY WITH PEDESTAL (PAR+ES)

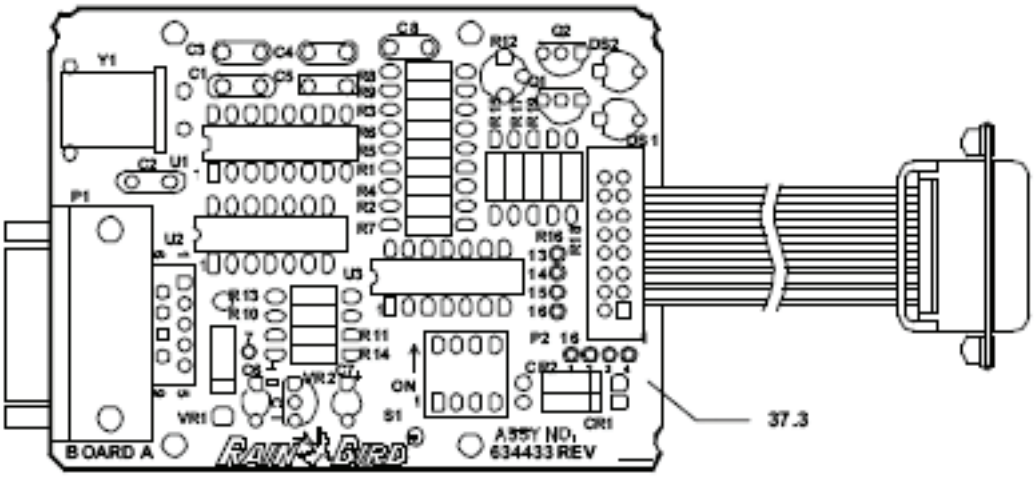

Ref.	Part Description	Qty.	PAR+ES
37.3	ASSY WIRELESS MODEM		634433
C5	Cap RAD .33MFD 50V	1	(626408)
P2	Cable Assy. Combox	1	(632367)
C1, 3	Capacitor CER Disc, 50V(MIN) 1PFTO8200	2	(65001210)
C2, 4, 8	Capacitor CER 0.1MF 50V	3	(65001345)
CR1	Diode 1N4002	1	(65007702)
R15, 16	Resistor 1/4W 10% 470 OHM	2	(65007965)
R17, 18	Resistor 1/4W 10% 4.7 K	2	(65007989)
R5	Resistor 1/4W 10% 10 K	1	(65007997)
R3	Resistor 1/4W 10% 20 K	1	(65008005)
R1,2,7,10,11,13,14,19	Resistor 1/4W 10% 47 K	8	(65008014)
R6	Resistor 1/4W 10% 56 K	1	(65008016)
R4	Resistor 1/4W 10% 100 K	1	(65008022)
(U1)	Socket, Dip, Low Profile 16 Pins	1	(65008103)
Q1, Q2	Transistor, NPN 600MW PN2222	2	(650084)
U2	IC, Inverter 74HC14	1	(650540)
C7	Capacitor 2.2UFD 25V Tantalum	1	(65058303)
C6	Capacitor 22UFD 25V Tantalum	1	65058309
VR1	Transient Suppressor 18V	1	65059522
(CR2)	Wire, A.I.	1	(65062503)
R12	POT, 10K OHM 1/4" Single Turn	1	(65073910)
Y1	Crystal, 3.579545 MHZ	1	(650759)
DS1, 2	Led, Clear Red Super Bright	2	(650910)
U3	IC Quad 2-input EX-OR	1	(650937)
VR2	Voltage Regulator	1	650938
P1	Connector Plug Right Angle PC	1	(65113002)
U1	IC, M X 614 1200 BPS	1	651141

Note: Part numbers enclosed in brackets ( ) are not available individually, but may be sold in assemblies or kits.

CONTROLLER ASSEMBLY WITH PEDESTAL (PAR+ES)

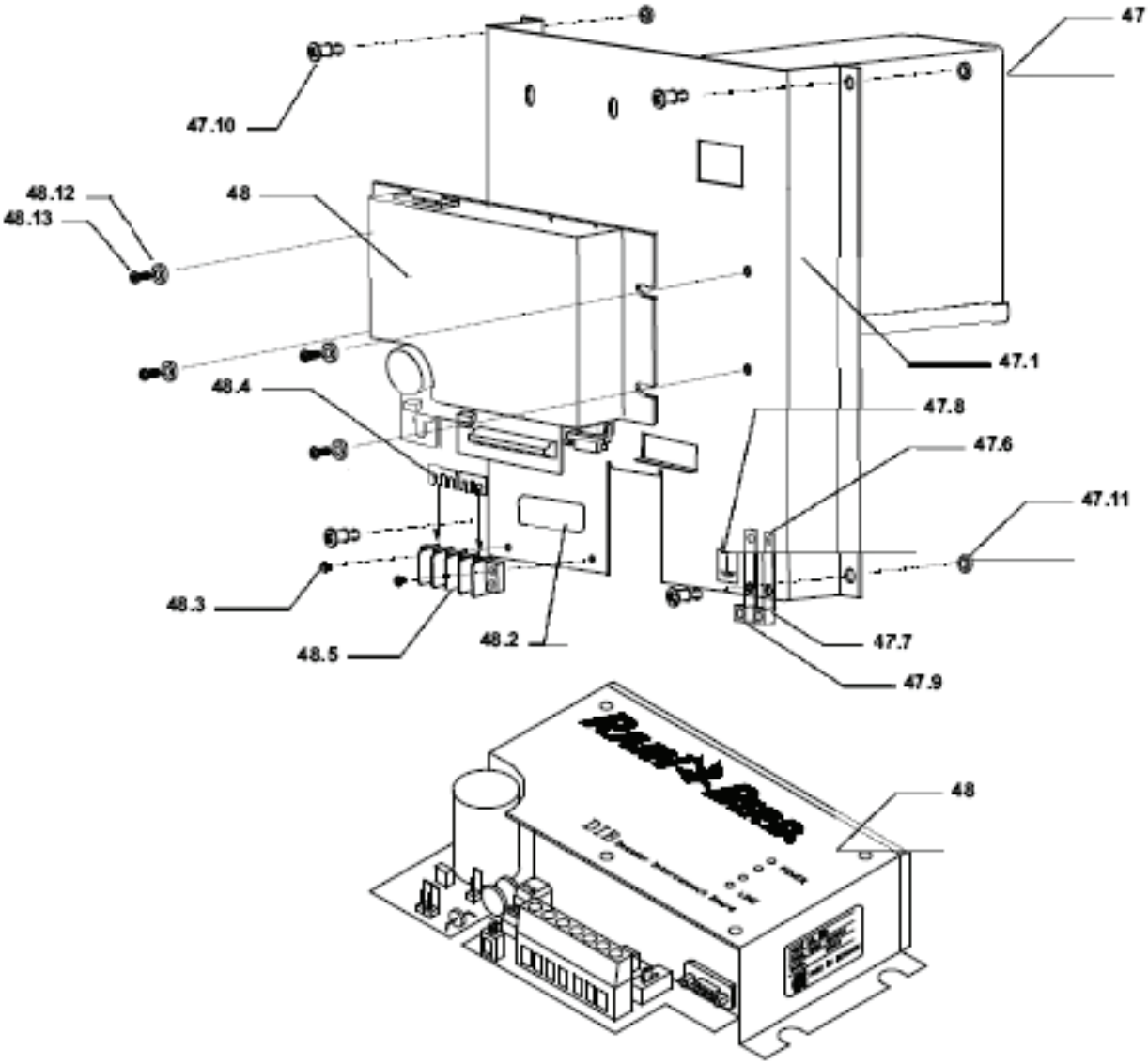

Ref.		Part Description	Qty.	PAR+ES(LINK)	PAR+ES(TWO WIRE)
47		DIB BRACKET ASSY	1	(63586701)	
47		DIB BRACKET ASSY	1		(63586702)
	47.1	Plate, DIB Mount, Steel	1	(636078)	(636078)
	47.2	Label, Two Wire Terminal Block	(0)1		(635228)
	47.3	Screw 6-32 X 3/8	2		(65010528)
	47.4	Jumper 2 Position	2		(651516)
	47.5	Terminal Block (4 Circu)	1		(651501S)
	47.6	Rivet Blink	4	(65042213)	(65042213)
	47.7	Lug, Single Barrel, Coper, Two HL	1	(650892)	(650892)
	47.8	Label, Ground Symbol (IEC-509)	1	(651037)	(651037)
	47.9	Lug, Single Barrel, Copper Two	1	(65135002)	(65135002)
	47.10	Stud Phillips, Oval Steel	4	(651511)	(651511)
	47.11	Retainer, Black Nylon	4	(651512)	(651512)
	47.12	Washer, Flat #10 .032	4	(65002313)	(65002313)
	47.13	Screw, #8-32 X 3/8" PHIL	4	(65048027)	(65048027)
	48	DECODER INTERFACE BOARD (DIB)	1	636104	636104S

Note: Part numbers enclosed in brackets ( ) are not available individually, but may be sold in assemblies or kits.

TO BUY GENUINE RAIN BIRD PARTS, CONTACT YOUR LOCAL DISTRIBUTOR OR VISIT OUR ONLINE STORE AT WWW.RAINBIRD.COM

INTEGRATED CONTROL INTERFACE PLUS (ICI+) AND ICI+ LINK

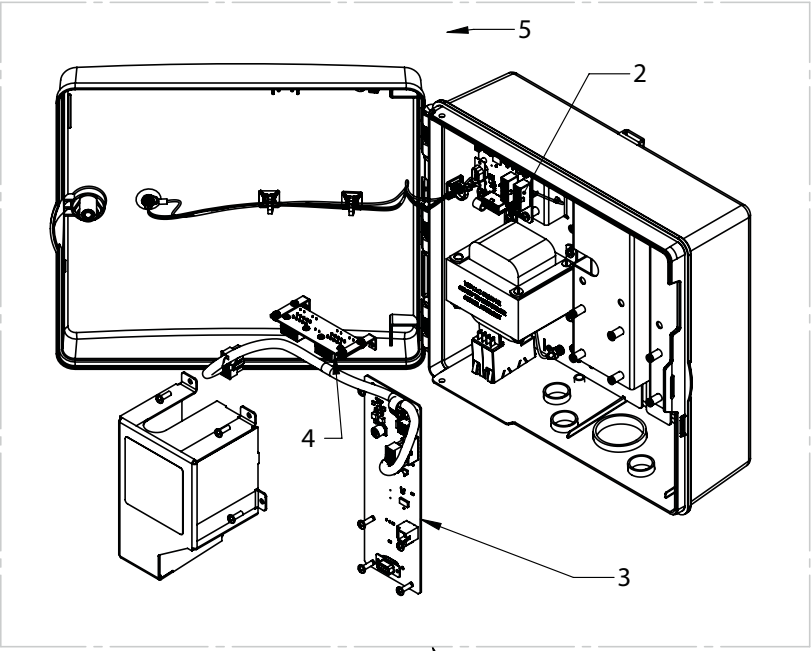

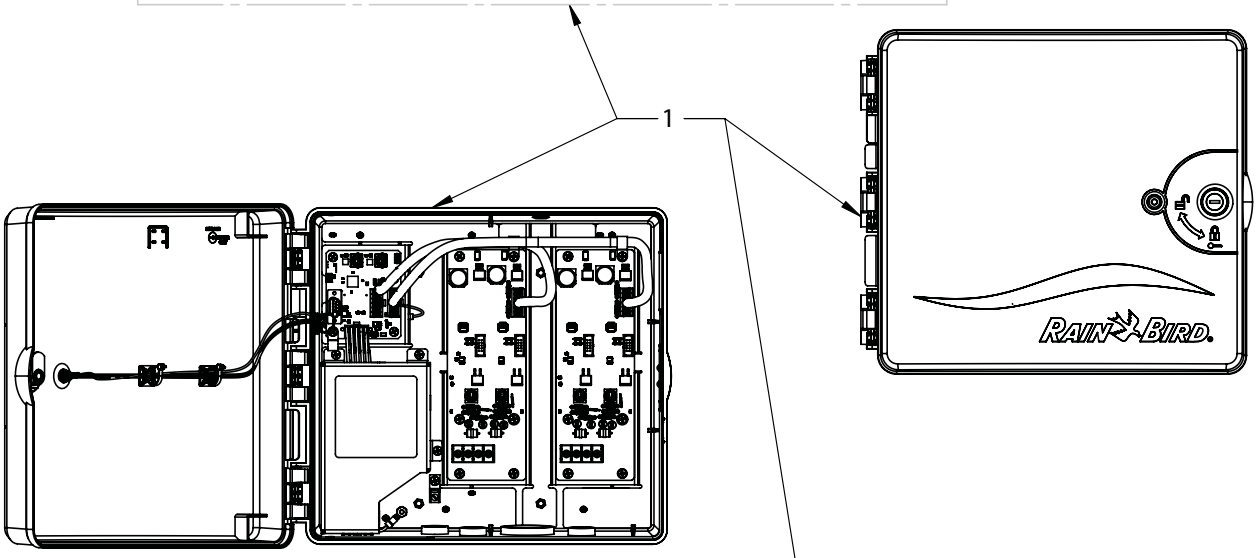

ICI+ CONFIGURATION WITH TWO ICI+ (ONLY) DRIVER BOARDS

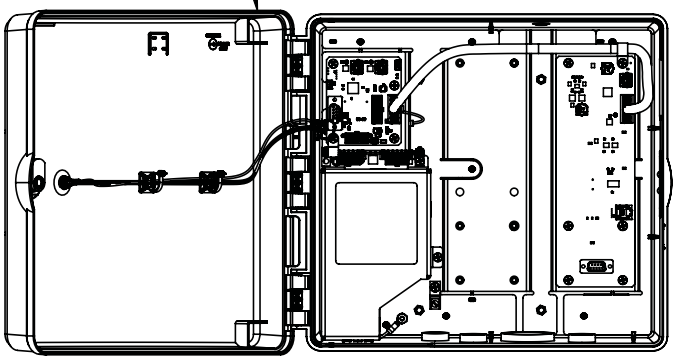

ICI+ LINK CONFIGURATION WITH ONE LINK OUTPUT BOARD

Note: Part numbers enclosed in brackets ( ) are not available individually, but may be sold in assemblies or kits.

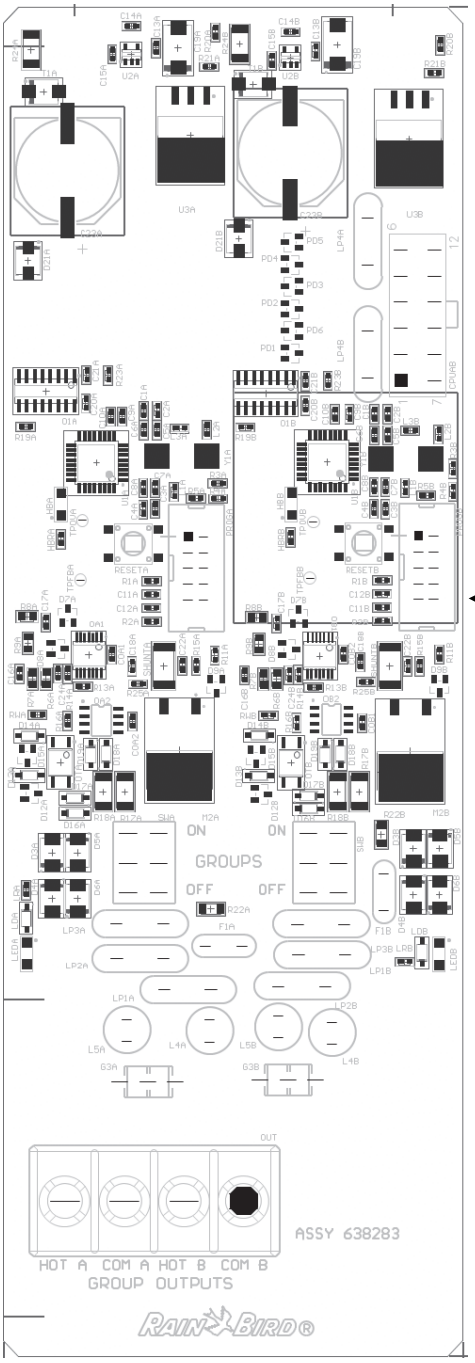

3

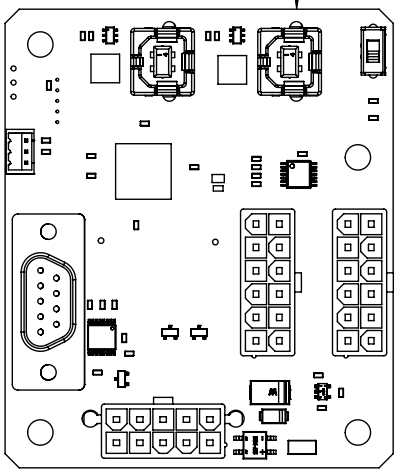

2

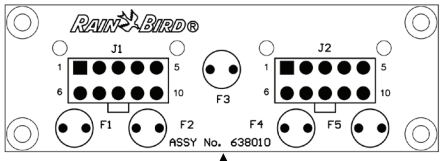

4

Ref.	Part Description	Qty.	P/N
INTEGRATED CONTROL INTERFACE PLUS (ICI+)			
1	ICI+ 120 VAC	1	HS6020
1	ICI+ 230 VAC	1	HS6085
1	ICI+ 100 VAC	1	HS6090
1	ICI+ LINK	1	HS6099
CPU BOARDS - ICI+ *			
2	ICI+ CPU BOARD (A)	1	214112
CPU BOARDS - ICI *			
2	ICI CPU BOARD (A)	1	213045
DRIVER BOARDS - ICI+ *			
3	ICI+ DRIVER BOARD 2WP	1	(214111)
3	ICI+ LINK OUTPUT BOARD (A)	1	214110
DRIVER BOARDS - ICI *			
3	ICI DRIVER BOARD 2WP	1	213046S
FUSE BOARD			
4	ICI FUSE BOARD (All)	1	-638010
KEYS			
5	ICI KEY (No. CH751)	2	-

(A) Product is available through the Production & Service Center (gsplabrequests@rainbird.com).

*** Boards are specific to ICI or ICI+ and are not interchangeable**

Note: Part numbers enclosed in brackets ( ) are not available individually, but may be sold in assemblies or kits.

TO BUY GENUINE RAIN BIRD PARTS, CONTACT YOUR LOCAL DISTRIBUTOR OR VISIT OUR ONLINE STORE AT WWW.RAINBIRD.COM

MAXI REMOTE LOCATION KIT

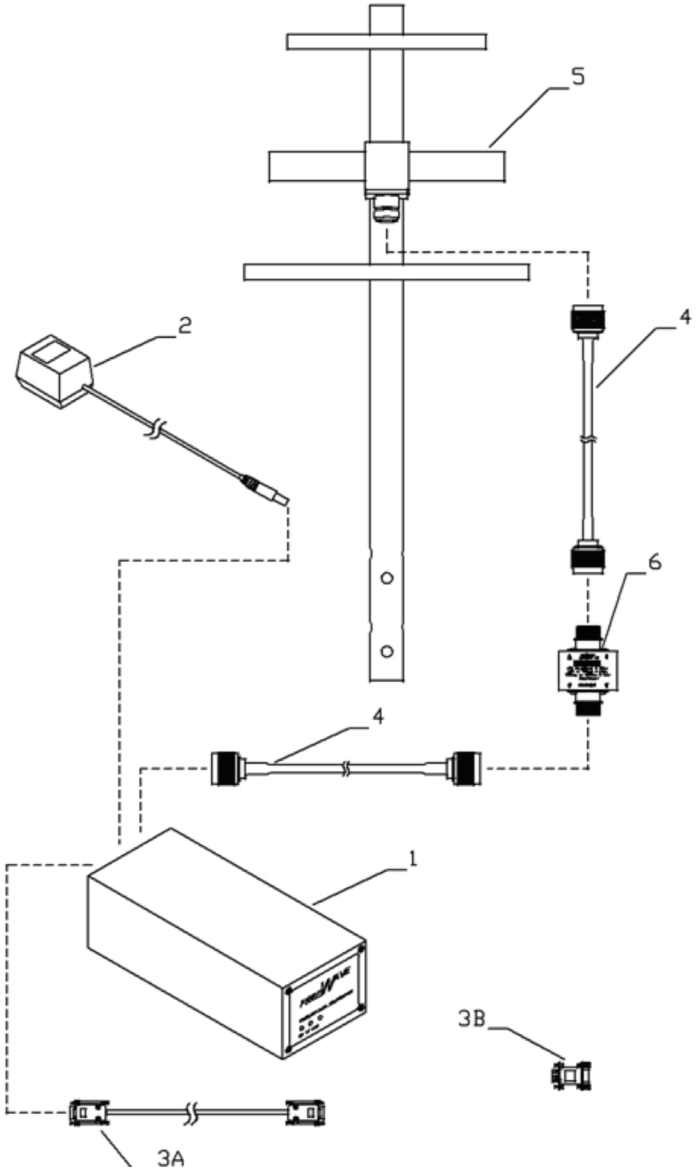

Ref.	Part Description	Qty.	P/N
MAXI	REMOTE LOCATION KIT		HA1000
1	SPREAD SPECTRUM RADIO	2	HA1100
2	TRANSFORMER	2	-
3B	NULL MODEM	1	-
3A	RS232 INTERFACE CABLE	2	-
4	COAXIAL CABLE	4	-635089
5	YAGI DIRECTIONAL ANTENNA	2	(635090-01)
6	POLY PHASER	2	-635088

Note: Part numbers enclosed in brackets ( ) are not available individually, but may be sold in assemblies or kits.

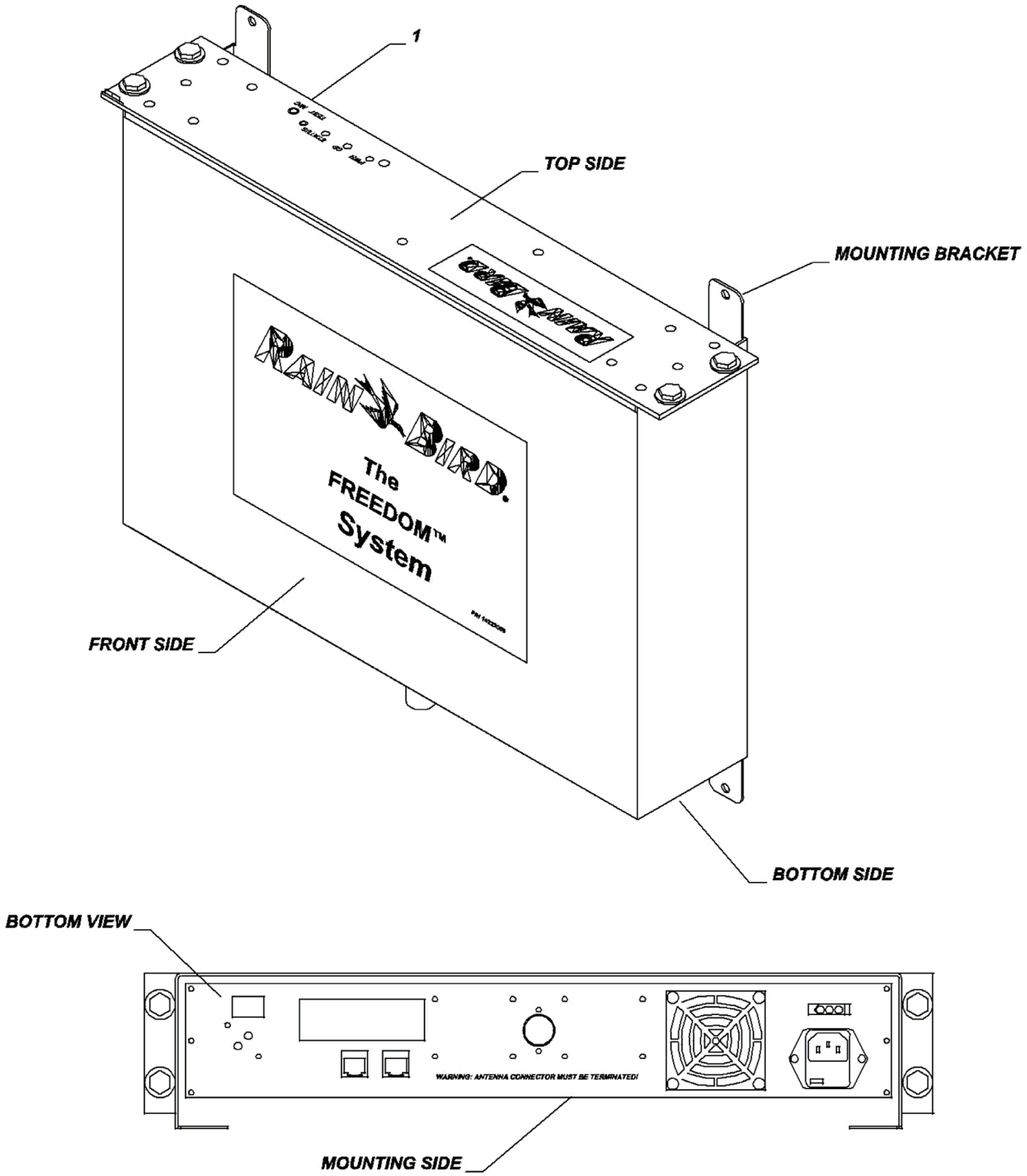

Note: Part numbers enclosed in brackets ( ) are not available individually, but may be sold in assemblies or kits.

TO BUY GENUINE RAIN BIRD PARTS, CONTACT YOUR LOCAL DISTRIBUTOR OR VISIT OUR ONLINE STORE AT WWW.RAINBIRD.COM

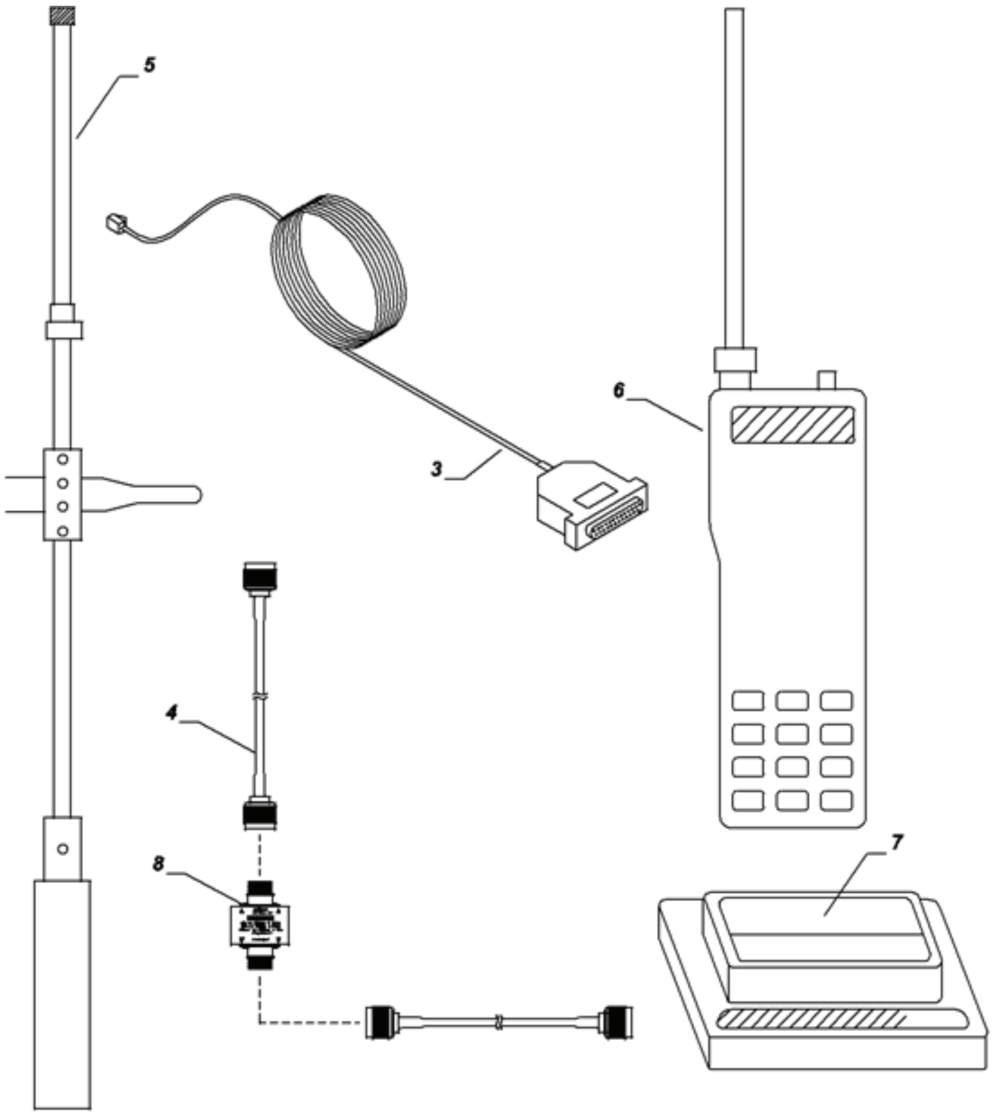

Ref.	Part Description	Qty.	P/N
The FREEDOM SYSTEM™ STANDARD FREQUENCY			HA1000
Tx: 452.1875 Rx: 457.1875			
-	SPECIAL FREQUENCY (450 – 470 MHz) – CANADA ONLY	-	H59504
1	NARROWBAND SYNTHESIZED REPEATER	1	FRX-452
2	AUTOPATCH	1	RP-200
3	COMPUTER CABLE	1	FP-2PC
4	RG-8/N COAXIAL CABLE	2	RAC-02NN
5	2.5 DB ANTENNA	1	ROA-SS
6	HANDHELD WITH DTMF*	1	FTX-454
7	QUICK-RATE CHARGER*	1	FCP-FS
8	POLYPHASER SURGE PROTECTOR	1	HA1100

Note: Requires complete Site Survey and FCC License or Notice of Coordination before shipping. Distributor wil l be responsible for FCC l icense fees for FREEDOM system.

** Not included with Canadian version of the FREEDOM system.*

Note: Part numbers enclosed in brackets ( ) are not available individually, but may be sold in assemblies or kits.

STANDARD SWING JOINT ASSEMBLY

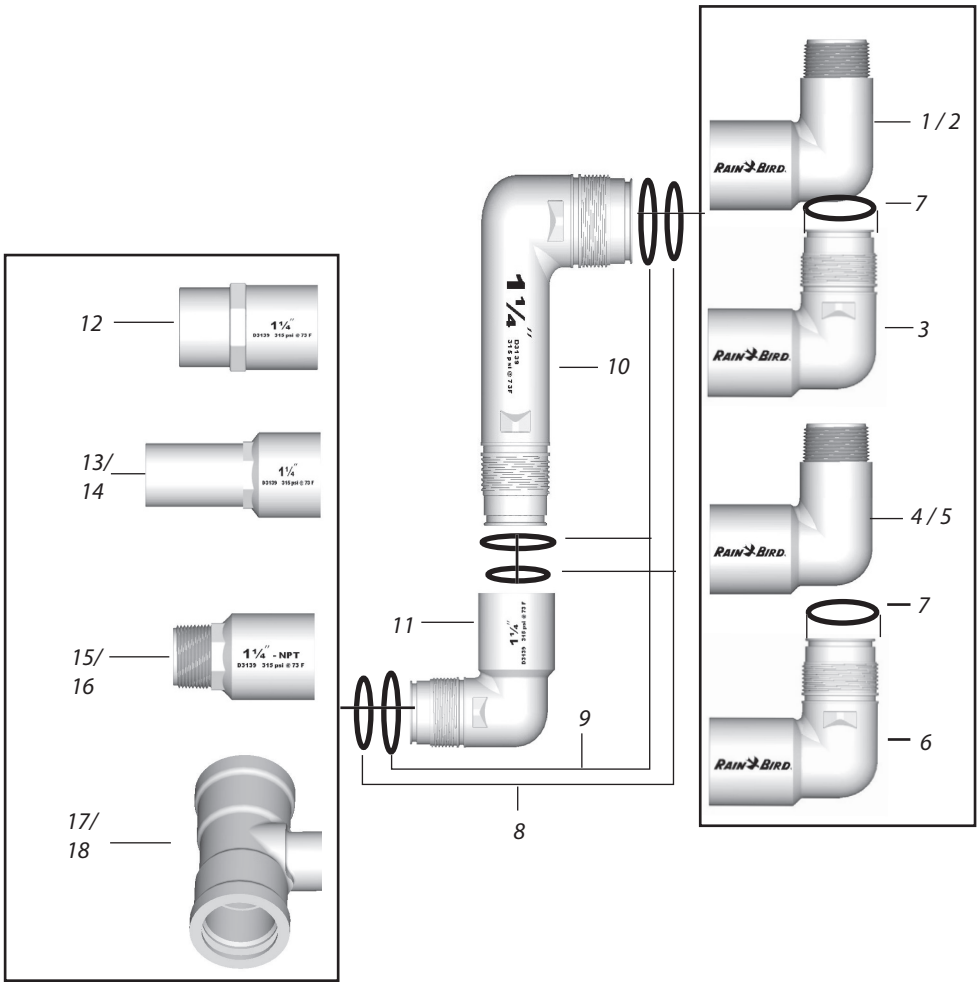

Ref.	Part Description	Qty.	1"	1 1/4"	1 1/2"
1	Outlet (NPT)	1	21187001	21187801	21186601
2	Outlet (BSP)	1	21187002	(21187802)	(21186602)
3	Outlet (ACME)*	1	212008	212014	212020
4	Enlarging Outlet (NPT)	1	(21187101)	(21187901)	N/A
5	Enlarging Outlet (BSP)	1	(21187102)	(21187902)	N/A
6	Enlarging Outlet (ACME)*	1	212009	212015	N/A
7	O-Ring, Outlet Seal (ACME)	1	21187201	21187204	21187207
8	O-Ring, Internal (Front) Seal	3	21187202	21187205	21187208
9	O-Ring, Internal (Back) Seal	3	21187203	21187206	21187209
10	Layarm 8"*	1	—	—	—
–	12"*	1	—	—	—
–	18"*	1	—	—	—
11	Internal Elbow	1	212007	212013	212019
12	Socket Inlet	1	(21186703)	(21187503)	(21186303)
13	Spigot Inlet	1	21186704	21187504	(21186304)
14	Metric Spigot Inlet	1	(21186705)	(21187505)	(21186305)
15	Inlet (NPT)	1	21186701	21187501	21186301
16	Inlet (BSP)	1	(21186702)	(21187502)	(21186302)
17	Gasketed - Service Tee 2"	1	—	—	—
18	Gasketed - Service Tee 2.5"	1	—	—	—

* Includes o-ring(s)

Note: Part numbers enclosed in brackets ( ) are not available individually, but may be sold in assemblies or kits.

TO BUY GENUINE RAIN BIRD PARTS, CONTACT YOUR LOCAL DISTRIBUTOR OR VISIT OUR ONLINE STORE AT WWW.RAINBIRD.COM

STANDARD SWING JOINT ASSEMBLY WITH ACME INLET

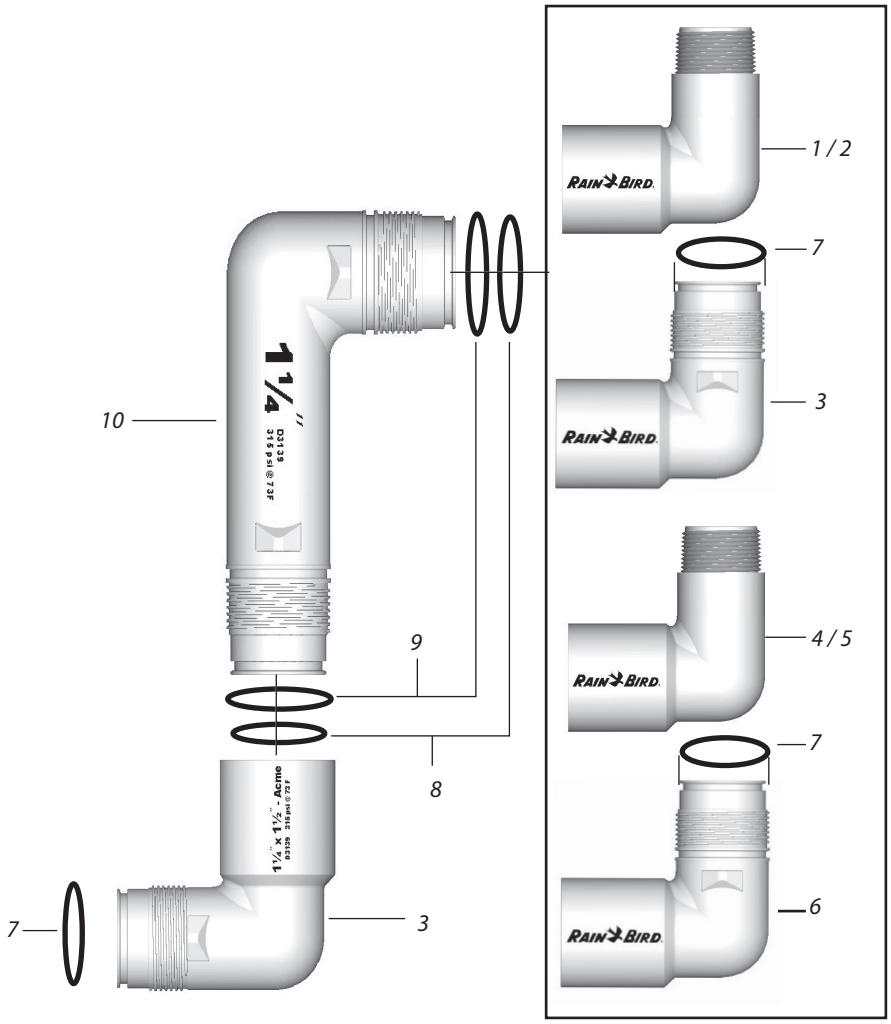

Ref.	Part Description	Qty.	1"	1 1/4"	1 1/2"
1	Outlet (NPT)	1	21187001	21187801	21186601
2	Outlet (BSP)	1	21187002	(21187802)	(21186602)
3	Outlet (ACME)*	1	212008	212014	212020
4	Enlarging Outlet (NPT)	1	(21187101)	21187901	N/A
5	Enlarging Outlet (BSP)	1	(21187102)	(21187902)	N/A
6	Enlarging Outlet (ACME)*	1	212009	212015	N/A
7	O-Ring, Outlet Seal (ACME)	1	21187201	21187204	21187207
8	O-Ring, Internal (Front) Seal	2	21187202	21187205	21187208
9	O-Ring, Internal (Back) Seal	2	21187203	21187206	21187209
10	Layarm 8"*	1	—	—	—
–	12"*	1	—	—	—
–	18"*	1	—	—	—

* Includes o-ring(s)

Note: Part numbers enclosed in brackets ( ) are not available individually, but may be sold in assemblies or kits.

TRIPLE TOP SWING JOINT ASSEMBLY

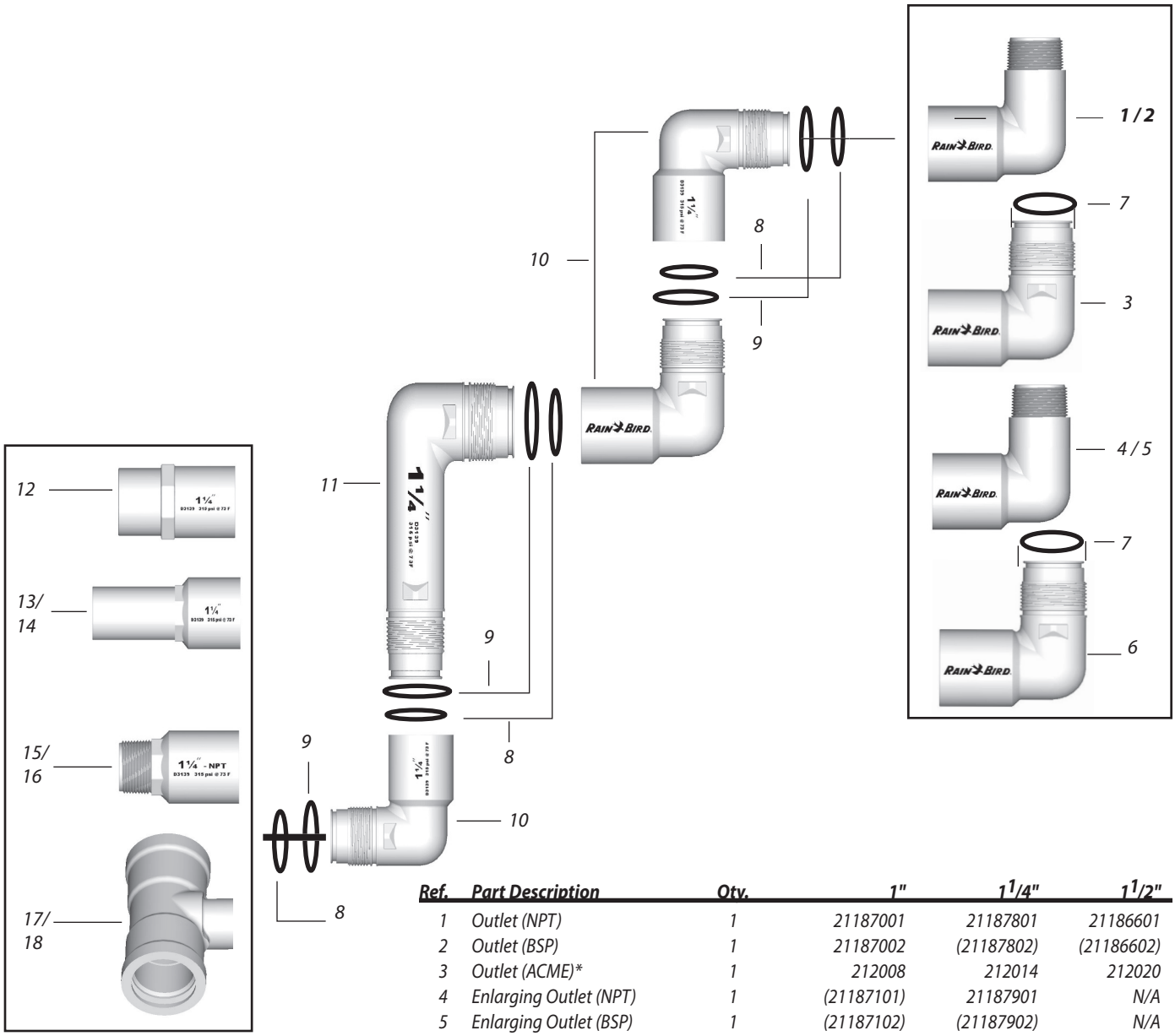

Ref.	Part Description	Qty.	1"	1 1/4"	1 1/2"
1	Outlet (NPT)	1	21187001	21187801	21186601
2	Outlet (BSP)	1	21187002	(21187802)	(21186602)
3	Outlet (ACME)*	1	212008	212014	212020
4	Enlarging Outlet (NPT)	1	(21187101)	21187901	N/A
5	Enlarging Outlet (BSP)	1	(21187102)	(21187902)	N/A
6	Enlarging Outlet (ACME)*	1	212009	212015	N/A
7	O-Ring, Outlet Seal (ACME)	1	21187201	21187204	21187207
8	O-Ring, Internal (Front) Seal	5	21187202	21187205	21187208
9	O-Ring, Internal (Back) Seal	5	21187203	21187206	21187209
10	Internal Elbow*	3	212007	212013	212019
11	Layarm 8"*	1	—	—	—
–	12"*	1	—	—	—
–	18"*	1	—	—	—
12	Socket Inlet	1	(21186703)	(21187503)	(21186303)
13	Spigot Inlet	1	21186704	21187504	(21186304)
14	Metric Spigot Inlet	1	(21186705)	(21187505)	(21186305)
15	Inlet (NPT)	1	21186701	21187501	21186301
16	Inlet (BSP)	1	(21186702)	(21187502)	(21186302)
17	Gasketed - Service Tee 2"	1	—	—	—
18	Gasketed - Service Tee 2.5"	1	—	—	—

* Includes o-ring(s)

Note: Part numbers enclosed in brackets ( ) are not available individually, but may be sold in assemblies or kits.

TO BUY GENUINE RAIN BIRD PARTS, CONTACT YOUR LOCAL DISTRIBUTOR OR VISIT OUR ONLINE STORE AT WWW.RAINBIRD.COM

TRIPLE TOP SWING JOINT ASSEMBLY WITH ACME INLET

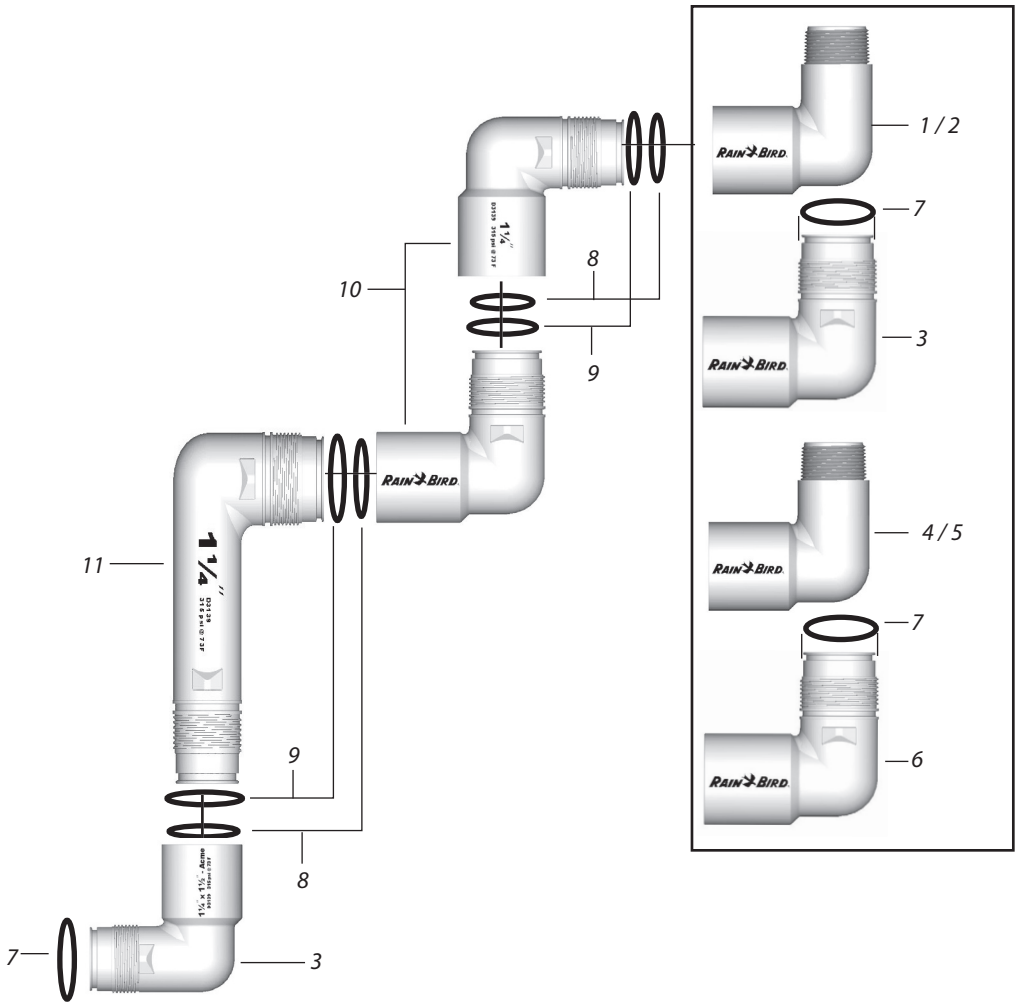

Ref.	Part Description	Qty.	1"	1 1/4"	1 1/2"
1	Outlet (NPT)	1	21187001	21187801	21186601
2	Outlet (BSP)	1	21187002	(21187802)	(21186602)
3	Outlet (ACME)*	2	212008	212014	212020
4	Enlarging Outlet (NPT)	1	(21187101)	(21187901)	N/A
5	Enlarging Outlet (BSP)	1	(21187102)	(21187902)	N/A
6	Enlarging Outlet (ACME)*	1	212009	212015	N/A
7	O-Ring, Outlet Seal (ACME)	1	21187201	21187204	21187207
8	O-Ring, Internal (Front) Seal	4	21187202	21187205	21187208
9	O-Ring, Internal (Back) Seal	4	21187203	21187206	21187209
10	Internal Elbow*	2	212007	212013	212019
11	Layarm 8"*	1	—	—	—
–	12"*	1	—	—	—
–	18"*	1	—	—	—

* Includes o-ring(s)

Note: Part numbers enclosed in brackets ( ) are not available individually, but may be sold in assemblies or kits.

ADAPTERS

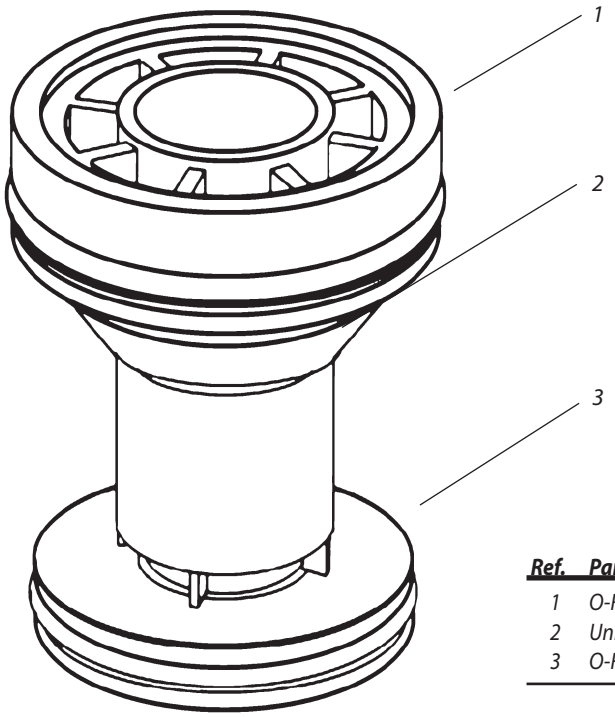

Ref.	Part Description	Qty.	Part No.
1	O-Ring, 900 Bearing Guide	1	212383
2	Universal Hose Adapter	1	—
3	O-Ring, 700 Bearing Guide	1	211242

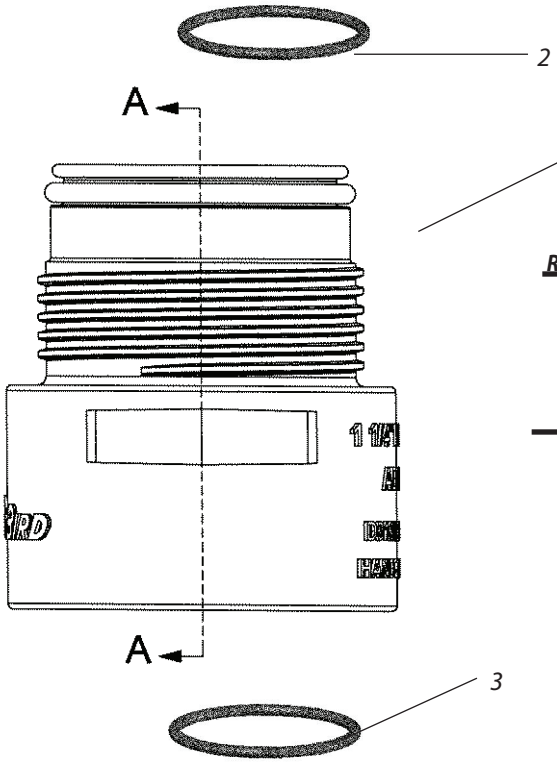

Ref.	Part Description	Qty.	1.00	1.25	1.50
1	NPT Female - ACME Male Adapter	1	—	-—	—
1	BSP Female - ACME Male Adapter	1	—	—	—
2	Outlet O-Ring	1	21187201	21187204	21187207
3	Inlet O-Ring	1	21187201	21187203	21187205

Note: Part numbers enclosed in brackets ( ) are not available individually, but may be sold in assemblies or kits.

TO BUY GENUINE RAIN BIRD PARTS, CONTACT YOUR LOCAL DISTRIBUTOR OR VISIT OUR ONLINE STORE AT WWW.RAINBIRD.COM

1

2

3

4

5

6

7

Ref.	Description	Part Number
1	DR-SVK-18", Selector Valve Key	D02221
2	DR-SVK-7", Selector Valve Key	D02215
3	Snap Ring Pliers 500/550 700/750	D02236
4	Valve Insertion Tool 500/550 700/750	B41710
5	Valve Insertion Tool 900/950	B41730
6	Selector Service Tool/Key - EAGLE/DR (Orange Tool)	B41720
7	Installation Socket for Top Serviceable Rock Screen	D02237

Note: Part numbers enclosed in brackets ( ) are not available individually, but may be sold in assemblies or kits.

Rain Bird Corporation
6991 East Southpoint Road
Tucson, AZ 85706
Phone: (800) 282-1933

® Registered trademark of Rain Bird Corporation
© 2022 Rain Bird Corporation 11/22