Tech Spec

G-Series "HN" Hydraulic Suction Scanning Screen Filter

Economy and Value with Lower Backwash Volumes

Rain Bird's G-Series HN Model Hydraulic SuctionScanning Screen Filter provides worry free 200 or 400 micron (standard) filtered water quality. Powered by source line water pressure, the filter's backwashing system produces a concentrated high velocity and low volume reverse water flow to systematically clean the screen of any entrapped contaminants. Models are available as a filter unit only.

Operation

Dirty water enters the inlet (1), where it enters the fine screen (2). The water passes through the screen from the inside to the out (3). The solids accumulate on the inner surface of the screen creating a pressure differential across the screen. Once the pressure differential reaches a preset value, a rinse cycle is activated and the Rain Bird supplied control system opens the electric solenoid valve (4) to drain. As a result, the pressure drops in the hydraulic motor chamber (5) and dirt collector assembly (6). The pressure drop causes water to backflush through the screen in a small concentrated area at the nozzle openings. The high velocity backwash stream pulls the dirt off the screen. The backwash water is carried through the collector and ejected out of the holes in the hydraulic motor (7). The dirt collector rotates while it moves linearly (on models with a piston assembly), ensuring the entire screen is cleaned each cycle. The process takes a matter of seconds, without interruption of system flow.

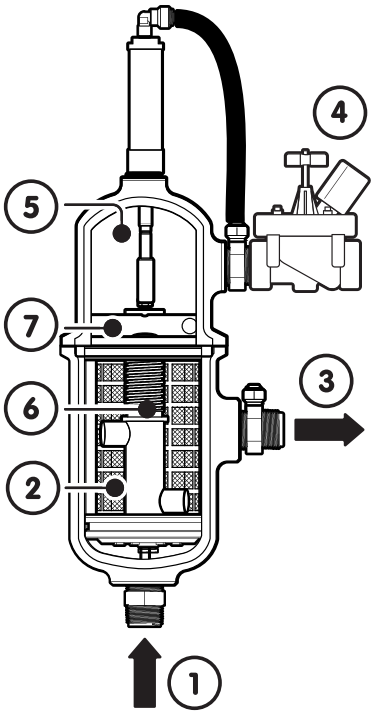

Monitoring and Controls

The standard Rain Bird automatic control system consists of a microprocessor based controller, a differential pressure switch and an electrically actuated solenoid flush valve. The differential pressure switch monitors inlet and outlet pressures and comes factory preset to 9 psi. The flush valve is activated by the controller when the differential pressure exceeds 9 psi. The filtration system is automatically monitored and controlled on elapsed time since the last cleaning cycle or pressure differential (user definable). If timed cleaning cycles are utilized, the system will automatically default to a backwash based on differential pressure if a 9 psi differential pressure is reached before the next timed cleaning cycle. Standard Rain Bird automatic controls are available for 110 VAC and are user configurable to 220 VAC, 50 / 60 Hz power.

Construction

Rain Bird G-Series HN Model filters are built for years of durable, trouble-free service. The bodies of the G-Series HN filters are made from Glass Reinforced Nylon. All wetted components are constructed of either engineered plastics or non-corrosive materials. SS wire mesh screens are supported with a Glass Reinforced Nylon support which virtually eliminates the possibility of screen collapse.

Models

HN - G - 0X - X - XXX

Filter Screen Micron Size
100
150
200
400

1: AC/DC Controller
2: IVM Solenoid or 24 VAC Solenoid- No Controller

Inlet/ Outlet Diameter
01: 1"
02: 2"

Model

HN-G-02-1-200	HN-G-02-2-200
HN-G-02-1-400	HN-G-02-2-400

Consult factory for options and custom configurations.

Specifications

- Heavy-duty, durable, SS woven wire mesh screen filtration element with Glass Reinforced Nylon support.
- 1″ or 2″ inlet and outlet (depending on model) standard.
- Configurable SS screen sizes available for 100, 150, 200 and 400 micron.
- Standard maximum flow rates up to 100 GPM (see sizing chart below).
- Standard maximum operating pressure of 100 PSI.
- Filtered, clean water backwashing initiated automatically by time or pressure differential via integrated Rain Bird controller.

"G-Series" Suction Scanning Screen Filter Performance Data

Line Size	Model Number	Woven Screen Area (in²)	Max Flow Rate (GPM)	Flush Volume (Gallons)	Rinse Duration (seconds)	Flush Line Size	Minimum Inlet Pressure & Flow During Rinse Cycle (PSI)
1″	HN-G-01-1	30	40	≈5	7	1″	40 PSI at 27 GPM
2″	HN-G-02-1	42	100	≈6	7	1″	40 PSI at 40 GPM

Flow is dependent on the Water Source Quality and the micron size of the screen. The following chart defines the maximum flows allowable based on Water Source Quality and screen micron size. Most applications will follow the Average, Poor or Very Poor lines. Water source should be rated at worst case scenario if water quality varies during the year (such as algae blooms during summer). A general guide to Water Quality is also shown below.

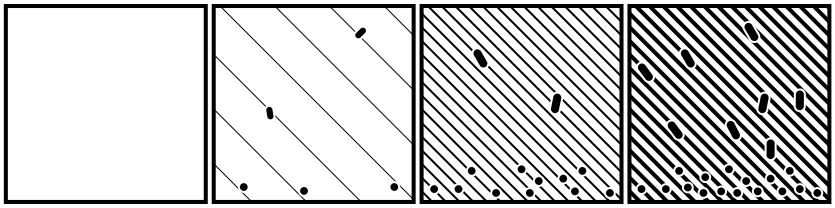

	Solids	< 20 ppm		< 40 ppm		< 80 ppm		< 110 ppm	
	Example	Well Water, municipal supply or equal.		Clear lake water or equal		River water.		Brown or green water (mud/algae).	
	Contamination	Very little, 100% clear, similar to drinking water quality.		95% clear water, small contaminants. No real discolouration of the water.		Light to medium discolouration.		Heavy discolouration. Medium algae, visible silt/ dirt etc.	
	Maximum Flow								
	Filter Size	1"	2"	1"	2"	1"	2"	1"	2"
Screen size	400 micron (47 mesh)	40 GPM 9 m³/h	100 GPM 22.7 m³/h	40 GPM 9 m³/h	100 GPM 22.7 m³/h	36 GPM 8.2 m³/h	55 GPM 12.5 m³/h	Not recommended	35 GPM 8 m³/h
	200 micron (88 mesh)	40 GPM 9 m³/h	100 GPM 22.7 m³/h	37 GPM 8.4 m³/h	85 GPM 19.3 m³/h	33 GPM 7.6 m³/h	50 GPM 11.4 m³/h		30 GPM 6.8 m³/h
	150 micron (100 mesh)	40 GPM 9 m³/h	95 GPM 21.6 m³/h	33 GPM 7.5 m³/h	70 GPM 15.9 m³/h	Not recommended	40 GPM 9 m³/h		Not recommended
	100 micron (150 mesh)	30 GPM 6.8 m³/h	75 GPM 17 m³/h	25 GPM 5.7 m³/h	45 GPM 10.2 m³/h		Not recommended		

Rain Bird Corporation
6991 E. Southpoint Road
Tucson, AZ 85756
Phone: (520) 741-6100
Fax: (520) 741-6522

Rain Bird Technical Services
(800) RAINBIRD (1-800-724-6247)
(U.S. and Canada)

Rain Bird Corporation
970 West Sierra Madre Avenue
Azusa, CA 91702
Phone: (626) 812-3400
Fax: (626) 812-3411

Rain Bird International, Inc.
1000 West Sierra Madre Ave.
Azusa, CA 91702
Phone: (626) 963-9311
Fax: (626) 852-7343

The Intelligent Use of Water™
www.rainbird.com