Pump Tech Spec

130 PSI Maximum Discharge Pressure

CLP Series

Compact Low Profile 5HP VFD Pump Station

Up to 50 GPM at 60 PSI boost or up to 140 GPM at 30 PSI boost.
See Performance Curve.

Pipe fill mode reducing surge at pump start up!

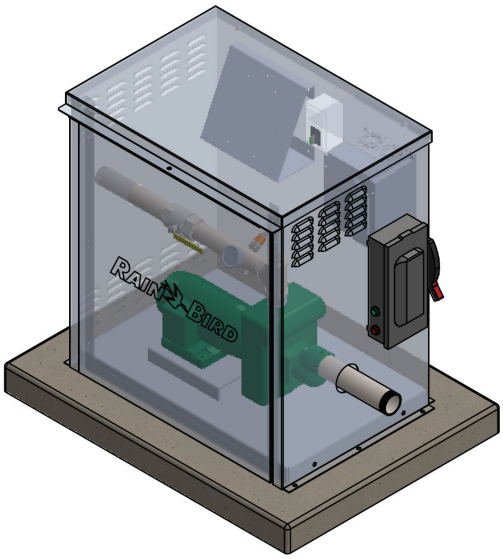

Rain Bird's CLP Series pump station is designed for self-priming lift and flooded suction applications. The CLP Series is a complete pump package that is simple to install and operate. It includes a professional-grade pump, a marine-grade aluminum enclosure, highest quality pump protection, and optional mounting for a Rain Bird controller. Home owner associations, small sports fields, schools, parks, and small agricultural projects are ideal applications. The CLP Series compact design, durable centrifugal boost pump, and ease of installation, make this a perfect solution for applications with flows up to 140 GPM. With this complete solution there is no need to deal with the hassle of stick building a pump station with non-compatible parts and a makeshift enclosure. Only Rain Bird provides a totally integrated irrigation solution with UL listed components and a one year warranty that dependably delivers healthy and beautiful landscapes, saving time and minimizing maintenance.

At-A-Glance Description

- **Variable Frequency Drive (VFD)**
- **Pump Start Relay** included
- **Aluminum Deck and Enclosure**
- **Stainless Steel Piping**
- **Isolation Valve** for maintenance
- **Manual Switch** provides user full control and override capabilities
- **2" NPT Discharge, 2.5" NPT Intake**
- **Available in single and three phase 208V, 220V, 230V VAC configurations**
- **Mounting options for Rain Bird Controllers** (purchased separately)

Features

- **Plumbing Configurations**
  - Inlet and discharge piping on opposite sides of the enclosure (as shown)
  - ¾" and 2" Boost Ports Included
- **Mechanical Features**
  - Isolation valve
  - Liquid filled pressure gauge
  - Rugged centrifugal pump
- **Enclosures / External Connections**
  - Marine grade aluminum enclosure
  - Marine grade aluminum deck
  - Stainless Steel piping
  - Fused main power disconnect
- **Pump Control**
  - Pump Control: Requires Pump Start/Master valve signal from irrigation controller.
  - 24VAC Pump start relay included. Other voltages available as an accessory.
  - 130 °F Temperature cutout switch
- **Electrical Features**
  - Power Requirement: Single or three phase 208V, 220V, or 230V AC.
  - TEFC Motor
  - UL listed components
- **Energy efficient – Variable Frequency Drive (VFD) maintains constant pressure at varying flow demand.**
  - Stainless steel pressure transducer
  - Red light for VFD alarms
  - Green pump running light
  - Pipe fill mode reducing pressure surge at pump start up
  - Programmable override pump speed
  - Loss of prime and pipe break alarm
  - Dead head shut down
  - Transducer loss shut down
- **Back panel for mounting Rain Bird controllers**
  - Pre-drilled for ESP-Me, ESP-LXMe, and ESP-LXD Series Controllers. **(Rain Bird controller purchased separately)**
  - **Separate** independent power feed required to power controller.
  - Mounted inside or outside aluminum enclosure

Accessories

- **Pump Start Relay**
  - 6VDC, 12VDC
- **Surge Suppression Kit**
  - Single Phase (208-230 VAC)
  - Three Phase (208-230 VAC)

Compact Low Profile 5HP VFD Pump Station Performance

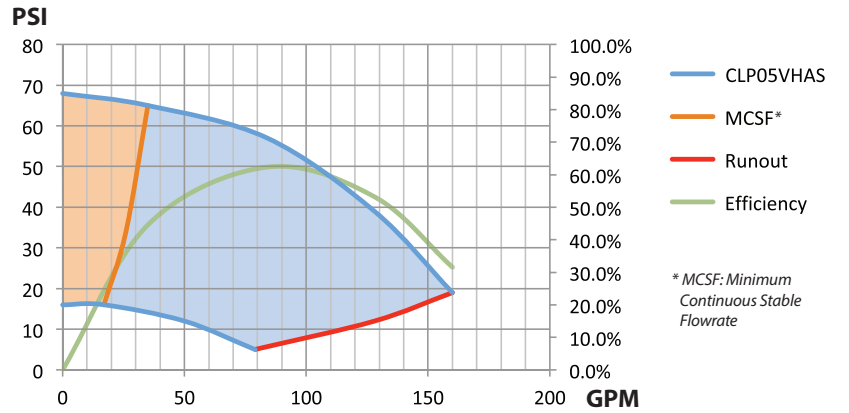

Details

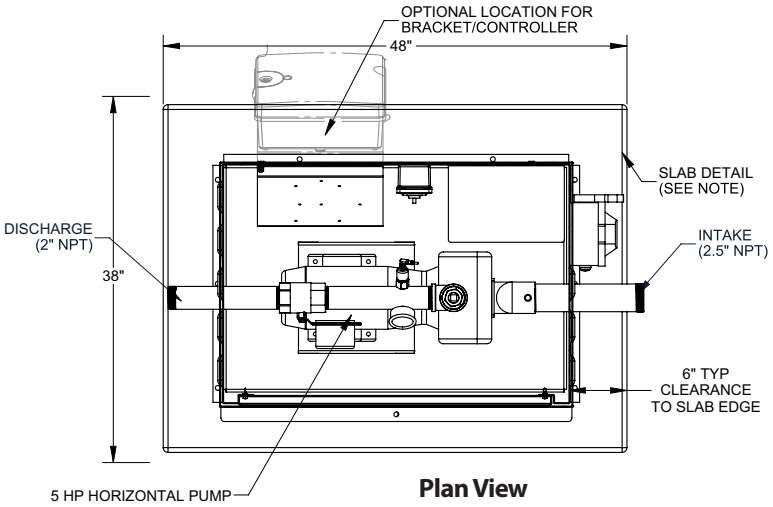

Plan View

REFER TO PERFORMANCE FLOW CHART OR PUMP CURVE TO DETERMINE
YOUR OPERATING FLOW AND PRESSURE COMBINATION

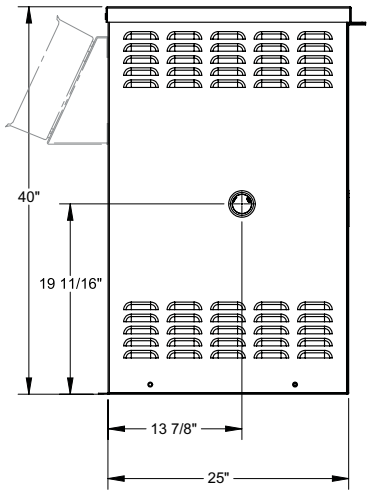

Side View

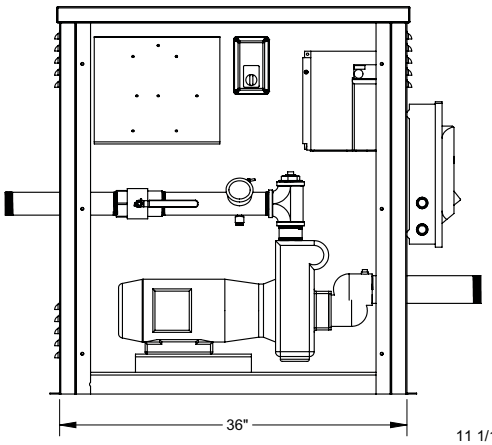

Profile View

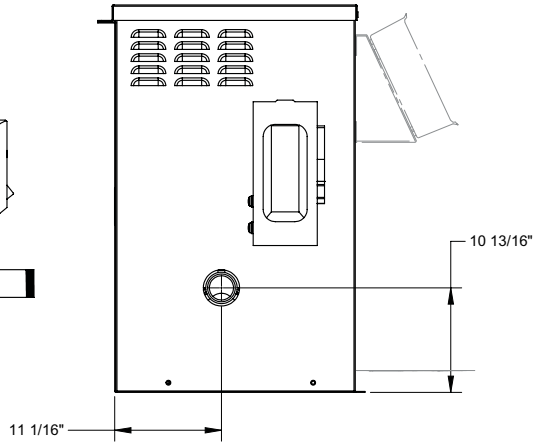

Side View

CLP 05 V H AS C1

Motor HP: 05
See selection guide for available 3HP, 7.5HP, and 10HP options.

Pump Curve: H
Curve available below. See selection guide for curves A - N.

Voltage: C1
200VAC single or three phase.

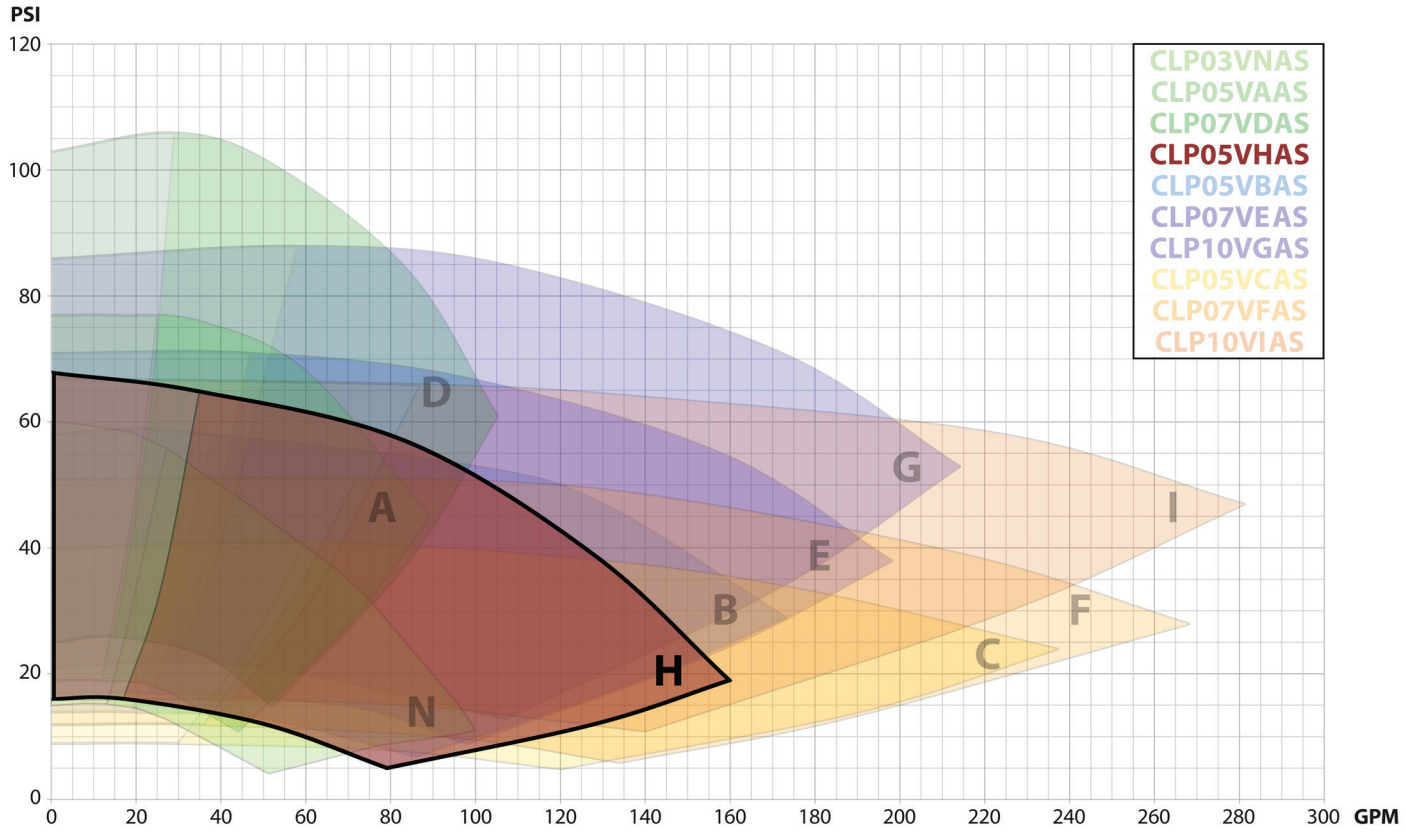

Rain Bird Corporation - Pumps Division
6991 E. Southpoint Road
Tucson, AZ 85756
Applications Group: (520) 806-5620
Fax: (520) 741-6191
E-mail: pumps@rainbird.com

The Intelligent Use of Water™
www.rainbird.com

® Registered Trademark of Rain Bird Corporation
© 2019 Rain Bird Corporation 2/19

D41403